DL11 asynchronous line interface manual

pdp11

digital

EK-DL11-TM-003

DL11
asynchronous line
interface manual

digital equipment corporation · maynard, massachusetts

1st Edition, September 1972
2nd Printing, May 1973
3rd Printing (Rev), June 1974
4th Printing, January 1975
5th Printing (Rev), September 19

Copyright © 1972, 1973, 1974, 1975 by Digital Equipment Corporation

The material in this manual is for informational purposes and is subject to change without notice.

Digital Equipment Corporation assumes no responsibility for any errors which may appear in this manual.

Printed in U.S.A.

The following are trademarks of Digital Equipment Corporation, Maynard, Massachusetts:

DEC	PDP
FLIP CHIP	FOCAL
DIGITAL	COMPUTER LAB
UNIBUS	

CONTENTS

		Page
CHAPTER 1	**INTRODUCTION**	
1.1	Introduction	1-1
1.2	Scope	1-1
1.3	Maintenance	1-3
1.4	Engineering Drawings	1-3
CHAPTER 2	**GENERAL DESCRIPTION**	
2.1	Introduction	2-1
2.2	Available Options	2-1
2.3	Data Format	2-4
2.4	Functional Description	2-6
2.4.1	DL11 Dataset Interface	2-6
2.4.2	DL11 Teletype Control	2-8
2.4.3	DL11 EIA Terminal Control	2-9
2.5	Physical Description	2-10
2.6	Specifications	2-11
CHAPTER 3	**INSTALLATION AND CONFIGURATION**	
3.1	Introduction	3-1
3.2	Configuration	3-1
3.3	Installation	3-1
3.3.1	Power Connections	3-3
3.3.2	Address and Priority Assignments	3-3
3.3.3	Installation Testing	3-3
3.4	Cabling	3-3
CHAPTER 4	**PROGRAMMING INFORMATION**	
4.1	Scope	4-1
4.2	Device Registers	4-1
4.3	Interrupts	4-7
4.4	Timing Considerations	4-8
4.4.1	Receiver	4-8
4.4.2	Transmitter	4-8
4.4.3	Break Generation Logic	4-8
4.5	Program Notes	4-8
4.6	Program Example	4-9

CHAPTER 5 DETAILED DESCRIPTION

5.1 Introduction 5-1
5.2 Address Selection 5-2
5.2.1 Inputs 5-4
5.2.2 Outputs 5-6
5.3 Interrupt Control 5-7
5.4 Registers 5-10
5.4.1 Receiver Status Register (RCSR) 5-10
5.4.1.1 Dataset Interrupt Bit (15) 5-11
5.4.1.2 Dataset Status Bits (14, 13, 12, and 10) 5-12
5.4.1.3 Receiver Done (07) 5-12
5.4.1.4 Receiver Interrupt Enable (06) 5-13
5.4.1.5 Dataset Interrupt Enable (05) 5-13
5.4.1.6 Secondary Transmit (03) 5-14
5.4.1.7 Request To Send (02) 5-14
5.4.1.8 Data Terminal Ready (01) 5-14
5.4.1.9 Reader Enable (00) 5-15
5.4.2 Receiver Buffer Register (RBUF) 5-15
5.4.2.1 Receiver Error Bits 5-16
5.4.2.2 Receiver Data Bits 5-16
5.4.3 Transmitter Status Register (XCSR) 5-17
5.4.3.1 Transmitter Ready (07) 5-17
5.4.3.2 Transmitter Interrupt Enable (06) 5-18
5.4.4 Transmitter Buffer Register (XBUF) 5-18
5.5 Transmitter Control Logic 5-19
5.6 Receiver Control Logic 5-20
5.7 Universal Asynchronous Receiver/Transmitter (UART) 5-21
5.7.1 Receiver Operation 5-22
5.7.2 Transmitter Operation 5-23
5.8 Clock Logic 5-25
5.9 Maintenance Mode Logic 5-26
5.10 Break Generation Logic 5-28

APPENDIX A IC SCHEMATICS

7490 Frequency Divider
7492 Frequency Divider
7493 Frequency Divider
8271 4-Bit Shift Register
74153 4-Line To 1-Line Multiplexer
74175 Quad D-Type Flip-Flop

APPENDIX B VECTOR ADDRESSING

B.1 Introduction B-1
B.2 Interrupt Vectors B-2

ILLUSTRATIONS

Figure No.	Title	Page
2-1	DL11 Data Formats	2-4
2-2	DL11-E Block Diagram	2-6
2-3	DL11-A Block Diagram	2-8
2-4	Crystal and Switch Location	2-10
3-1	DL11 (M7800 module) Mounted in DD11-A	3-2
3-2	Jumper Locations on the M7800 Module	3-4
3-3	DL11 Cable Connections	3-5
4-1	Receiver Status Register (RCSR) – Bit Assignments	4-2
4-2	Receiver Buffer Register (RBUF) – Bit Assignments	4-4
4-3	Transmitter Status Register (XCSR) – Bit Assignments	4-6
4-4	Transmitter Buffer Register (XBUF) – Bit Assignments	4-6
5-1	Address Selection Logic – Simplified Diagram	5-5
5-2	Interface Select Address Format	5-5
5-3	Interrupt Control Logic – Simplified Diagram	5-8
5-4	RBUF and XBUF Gating Logic – Simplified Diagram (one bit position)	5-17
5-5	UART Receiver – Block Diagram	5-23
5-6	UART Transmitter – Block Diagram	5-24
5-7	Frequency Divider Logic – Simplified Diagram	5-26
5-8	Operating Modes	5-27
5-9	Maintenance Logic – Simplified Diagram	5-28
B-1	Address Map	B-4

TABLES

Table No.	Title	Page
1-1	Applicable PDP-11 Documents	1-2
1-2	Applicable Device Documents	1-3
2-1	DL11 Options	2-2
2-2	Baud Rates with Standard Crystals	2-3
2-3	Data Format Jumpers	2-5
2-4	DL11 Operating Specifications	2-11
3-1	Option Configurations	3-2
3-2	Pin Connections	3-6
3-3	Input/Output Signals	3-7
3-4	7008360 Connections	3-7
3-5	7008519 Connections	3-8
3-6	BC05C Connections	3-8

4-1 Standard DL11 Register Assignments 4-1
5-1 DL11 Functional Units 5-1
5-2 DL11 Address Assignments 5-3
5-3 Register Selection Signals 5-6
5-4 DL11 Vectors and Priority Levels 5-7
5-5 Device Register Functions 5-11
5-6 Transmitter Control and Input Logic 5-19
5-7 Receiver Status and Control Logic 5-21

CHAPTER 1
INTRODUCTION

1.1 INTRODUCTION

The DL11 Asynchronous Line Interface is a character-buffered communications interface designed to assemble or disassemble the serial information required by a communications device for parallel transfer to, or from, the PDP-11 Unibus. The interface consists of a single integrated circuit quad module containing two independent units (receiver and transmitter) capable of simultaneous 2-way communication.

The DL11 interface provides the logic and buffer register necessary for program-controlled transfer of data between a PDP-11 system requiring parallel data and an external device requiring serial data. The interface also includes status and control bits that may be controlled by the program, the interface, or the external device for command, monitoring, and interrupt functions.

Five available DL11 options (DL11-A through DL11-E) provide the flexibility needed to handle a variety of terminals. For example, the user can use a DL11-A as a Teletype® Control or a DL11-E for complete dataset control of communications datasets such as the Bell Model 103 or 202. Depending on the option used, the user has a choice of line speeds (baud rates), character size, stop-code length, parity selection, line control functions, and status indications.

Although each option uses an M7800 module, certain discrete component variations exist for each specific option so that the interface performs the intended function. Therefore, although generally similar, each option uses a slightly different M7800 variation which is not interchangeable with other options. These variations are installed at the factory only. For example, an M7800 used as a DL11-A could be used as another DL11-A but not in place of a DL11-B, C, D, or E.

A description of the individual options is given in Chapter 2 of this manual.

1.2 SCOPE

This manual provides the user with the theory of operation and logic diagrams necessary to understand and maintain the DL11 Asynchronous Line Interface. The level of discussion assumes that the reader is familiar with basic digital computer theory.

® Teletype is a registered trademark of Teletype Corporation.

The manual is divided into five major chapters: Introduction, General Description, Installation and Configuration, Programming, and Theory of Operation. A complete set of engineering drawings is provided with each DL11 interface and is bound in a separate volume entitled *DL11 Asynchronous Line Interface, Engineering Drawings.*

In all cases, the information contained in this manual refers to all five options (DL11-A through DL11-E) unless specifically stated otherwise. Although control signals and data are transferred between the interface and the Unibus, and between the interface and the communications device, this manual is limited to coverage of only the interface itself.

Table 1-1 lists related PDP-11 system documents that are applicable to the DL11 Asynchronous Line Interface. Table 1-2 lists documents applicable to communications devices that may be used with the interface. Note that this latter table lists only representative manuals and is not intended to be an all-inclusive list.

Table 1-1
Applicable PDP-11 Documents

Title	Number	Description
PDP-11 System Manual		Provides detailed theory of operation, flow, logic diagrams, operation, installation, and maintenance for components of the applicable PDP-11 system including processor, memory, console, and power supply.
PDP-11 Peripherals Handbook		Provides a discussion of the various peripherals used with PDP-11 systems. It also provides detailed theory, flow, and logic descriptions of the Unibus and external device logic; methods of interface construction; and examples of typical interfaces.
Paper-Tape Software Programming Handbook	DEC-11-XPTSA-A-D	Provides a detailed discussion of the PDP-11 software system used to load, dump, edit, assemble, and debug PDP-11 programs; input/output programming and the floating-point and math package.

Table 1-2
Applicable Device Documents

Title	Number	Description
Automatic Send-Receive Sets, Manual	Bulletin 273B (two volumes) Teletype Corp.	Describes operation and maintenance of the Model 33 ASR Teletype unit used as an input/output device.
Model 33 Page Printer Set, Parts	Bulletin 1184B Teletype Corp.	Contains an illustrated parts breakdown to serve as a guide for disassembly, reassembly, and parts ordering for the Model 33 ASR Teletype unit.
		NOTE **Comparable manuals exist for other available Teletypes such as the Model 28, Model 35, and Model 37.**
VT05 Alphanumeric Display Terminal	EK-VT05-HR-002	Describes purpose and operation of the VT05 Display used as an input/output device.
VT05 Alphanumeric Display Terminal, Maintenance Manuals,	EK-VT05-MM-005	Provides detailed theory of operation and maintenance procedures for the VT05 Display.
VT06 Maintenance Manual	Datapoint Corp.	Provides detailed theory of operation and maintenance data for the VT06 Data Display Terminal.
Bell System Data Communications Data Sets 103 E/G/H		Provides dataset interface specifications; includes dataset description and options including interface signals and timing.
Bell System Data Communications Data Sets 202 C/D		Provides dataset interface specifications; includes dataset description and options including interface signals and timing.

1.3 MAINTENANCE

The basic maintenance philosophy of the DL11 Asynchronous Line Interface is to present the user with the information necessary to understand normal system operation. The user can utilize this information when analyzing trouble symptoms to determine necessary corrective action. A Modem Test Connector (Engineering Drawing D-CS-H315-0-1) can be used in troubleshooting the DL11.

1.4 ENGINEERING DRAWINGS

A complete set of engineering drawings and circuit schematics is provided in a companion volume to this manual entitled *DL11 Asynchronous Line Interface, Engineering Drawings.* The following paragraphs describe the signal nomenclature conventions used on the drawing set.

Signal names in the DL11 print set are in the following basic form:

SOURCE	SIGNAL NAME	POLARITY

SOURCE indicates the drawing number of the print set where the signal originates. The drawing number of a print is located in the lower right-hand corner of the print title block (DL-1, DL-2, DL-3, etc.).

SIGNAL NAME is the name proper of the signal. The names used on the print set are also used in this manual for correlation between the two.

POLARITY is either H or L to indicate the voltage level of the signal: H means +3V; L means ground.

As an example, the signal:

DL-4 RCVR DONE H

originates on sheet 4 of the M7800 module drawing and is read, "when RCVR DONE is true, this signal is at +3V."

Unibus signal lines do not carry a SOURCE indicator. These signal names represent a bidirectional wire-ORed bus; as a result, multiple sources for a particular bus signal exist. Each Unibus signal name is prefixed with the word BUS.

Interface signals fed to, or received from, the Berg connector on the M7800 module are preceded by the pin number in parentheses:

(DD) EIA DATA TERMINAL READY

CHAPTER 2
GENERAL DESCRIPTION

2.1 INTRODUCTION

The DL11 Asynchronous Line Interface is a character-buffered communications interface designed to translate serial bit stream data to parallel character data. The interface contains two independent units (receiver and transmitter) capable of simultaneous 2-way communication.

The five available DL11 options (DL11-A through DL11-E) provide the flexibility needed to handle a variety of terminals. For example, the user can select an option for interfacing a Teletype or display keyboard, for handling EIA data, or for handling dataset devices. In addition, depending on the option used, the user has a choice of line speeds, character size, stop-code length, and parity.

This chapter is divided into five major portions: available options, data format, functional description, physical description, and specifications.

2.2 AVAILABLE OPTIONS

There are five available DL11 options: DL11-A through DL11-E. The major differences among these options are the data code, baud rates, and certain control and monitoring bits in the status registers. Although there are five options, they may be divided into the following functional groups:

a.	Teletype Control	–	DL11-A DL11-C	–	The DL11-A and DL11-C both use a 20-mA current loop for receive, transmit, and reader run operations necessary for Teletype or display terminal control. The DL11-C is simply a more flexible version of the DL11-A and includes data code and baud rate selection.
b.	EIA Terminal Control	–	DL11-B DL11-D	–	The DL11-B and DL11-D both contain EIA drivers and receivers for compatability with the logic levels required for EIA terminals such as the VT06 display. The DL11-D is simply a more flexible version of the DL11-B and includes data code and baud rate selection.
c.	Data Set Control	–	DL11-E	–	The DL11-E provides complete data set control for communications modems such as Bell Model 103 or 202.

A brief description of each of these options is included in Table 2-1 and a listing of available standard baud rates is given in Table 2-2. Note that these baud rates are based on the standard crystals supplied by DEC; however, the user may order special crystals, if desired. The physical differences of each option (cables, connectors, etc.) are described in Paragraph 2.5.

Table 2-1
DL11 Options

Option	Data Code	Typical Use	Baud Rates	Notes	Description
DL11-A	Restricted(1)	Model 33 or 35 Teletype Model VT05 Display Terminal	110 150 300 600 1200 2400	a. No dataset bits a. No BREAK or ERROR bits c. No 1200/110 split	Uses 20-mA current loop operation for receive, transmit, and reader run.
DL11-B	Restricted(1)	Model VT05 or VT06 Display Terminal	Same as DL11-A	a. No dataset bits b. No BREAK or ERROR bits c. No 1200/110 split d. DATA TERMINAL RDY and REQ TO SEND bits strapped on permanently e. Null modem usually required for local EIA terminal	Has EIA drivers and receivers for compatability with EIA terminals.
DL11-C	Full Selection(2)	Model 28 Teletype	Crystal and switch selectable(3)	a. No dataset bits b. BREAK and ERROR bits enabled	Basically identical to DL11-A except has full code and baud rate selection. Also includes both BREAK and ERROR bits.
DL11-D	Full Selection(2)	Model 37 Teletype (null modem required)	Crystal and switch selectable(3)	a. No dataset bits b. BREAK and ERROR bits enabled c. DATA TERMINAL RDY and REQ TO SEND bits strapped on permanently	Basically identical to DL11-B except has full code and baud rate selection. Also includes both BREAK and ERROR bits.

(continued on next page)

Table 2-1 (Cont)
DL11 Options

Option	Data Code	Typical Use	Baud Rates	Notes	Description
DL11-E	Full Selection(2)	Model 103 or 202 modems	Crystal and switch select-able(3)	a. Full dataset control	Provides complete dataset control. Dataset lines monitored by this interface are: RING, RECEIVE DATA, CARRIER DETECT, CLEAR TO SEND, and SECONDARY RECEIVE DATA. Dataset lines controlled by the program are: TRANS-MITTED DATA, REQUEST TO SEND, SECONDARY TRANSMITTED DATA, and DATA TERMINAL READY.

NOTES: 1. Restricted data code = 8 data bits, no partiy, 1 or 2 stop bits.
2. Full selection data code = 5, 6, 7, or 8 data bits; parity off, even, or odd; and 1, 1.5, or 2 stop bits.
3. Baud rates that may be selected by the crystal and switch are listed in Table 2-2.

Table 2-2
Baud Rates with Standard Crystals

Switch Position	Crystal #1 (844.8 kHz)	Crystal #2 (1.03296 MHz)	Crystal #3 (1.152 MHz)	Crystal #4 (4.608 MHz)
1	36.7	44.8	*50*	200
2	55	67.3	*75*	*300*
3	*110*	*134.5*	*150*	*600*
4	220	269	*300*	*1200*
5	440	538	*600*	*2400*
6	880	1076	*1200*	*4800*
7	1320	1614	*1800*	*7200*
8	1760	2152	*2400*	*9600*
9*	–	–	–	–
10*	–	–	–	–

*These switch positions are for external clock inputs and do not tap off the crystal oscillator.

NOTE: The baud rates in italics are the most commonly used.

2.3 DATA FORMAT

There are two basic data formats used with the DL11 interface options. The first format (Figure 2-1,a) is referred to as "restricted" because the only variable is the number of STOP bits. A character in this format consists of a START bit, eight DATA bits, and one or two STOP bits. This code is used only with the DL11-A and DL11-B options.

The second format (Figure 2-1,b) is referred to as "full selection" because there is a number of variables. This format consists of a START bit, five to eight DATA bits, a PARITY bit or no PARITY bit, and one, one and one-half, or two STOP bits.

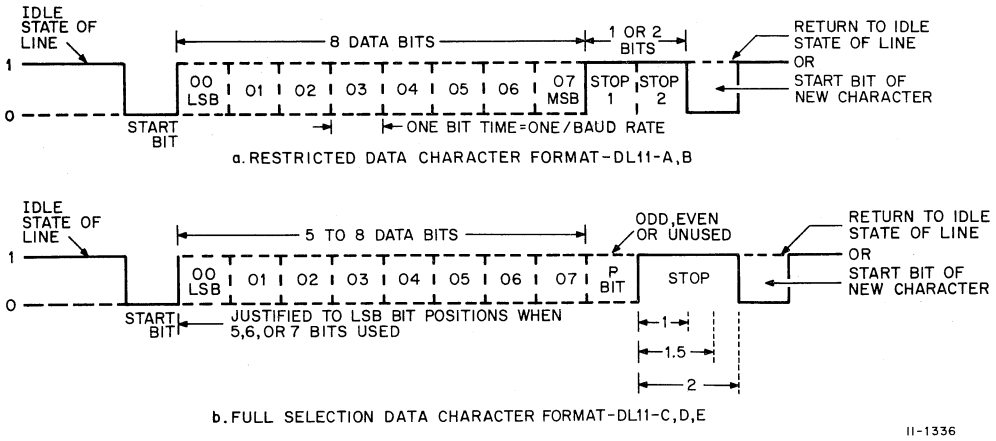

Figure 2-1 DL11 Data Formats

When less than eight DATA bits are selected in the second format, the hardware justifies the bits into the least significant bit positions for characters received by the interface. When transmitting characters, the program provides the justification into the least significant bits. The PARITY bit may be either on or off; when on, it can be selected for checking either odd or even parity during receive and for providing an extra PARITY bit during transmit.

All variable items within any data format are selected by jumpers on the DL11 module. None of the variables can be controlled by the program. Split lugs are provided on the module for installation of appropriate jumpers. These jumpers are listed in Table 2-3 and described more fully in Chapter 5.

Note that a jumper indicates a low (0) and no jumper indicates a high (1). The jumper locations are shown on DL11 drawing DL-4.

Table 2-3
Data Format Jumpers

Name	Jumper	UART Pin No.	Function
No Parity	NP	35	Enables or disables the parity bit in the data character. When enabled, the value of the parity bit is dependent on the type of parity (odd or even) selected by the even parity select (EPS) jumper. When disabled, the STOP bits immediately follow the last DATA bit during transmission. During reception, the receiver does not check for parity. jumper – parity enabled no jumper – parity disabled
Even Parity	EPS	39	Determines whether odd or even parity is to be used. The receiver checks the incoming character for appropriate parity; the transmitter inserts the appropriate parity value. jumper – odd parity no jumper – even parity
STOP Bit	2SB	36	Used in conjunction with three other jumpers (J9, J10, and J11) to select the desired number of STOP bits. 1 STOP bit – jumper in 2SB jumper in J10 no jumpers in J9, J11 2 STOP bits – no jumper in 2SB no jumpers in J9, J11 jumper in J10 1.5 STOP bits – jumper in 2SB jumper in J9 or J11 no jumper in J10
Number of Data Bits	NB1 NB2	38 37	These two jumpers are used together to provide a code that selects the desired number of DATA bits in the character. Note that in the following code, a 0 indicates a jumper, a 1 indicates no jumper: **NB2 NB1 No. of DATA Bits** 0 0 5 0 1 6 1 0 7 1 1 8

2.4 FUNCTIONAL DESCRIPTION

The DL11 is a character-buffered communications interface that performs two basic operations: receiving and transmitting asynchronous data. When receiving data, the interface converts an asynchronous serial character from an external device into the parallel character required for transfer to the Unibus. This parallel character can then be gated through the bus to memory, a processor register, or some other device. When transmitting data, a parallel character from the bus is converted to a serial line for transmission to the external device. Because the two data transfer units (receiver and transmitter) are independent, they are capable of simultaneous 2-way communication. The receiver and transmitter each operate through two related registers: a control and status register for command and monitoring functions, and a data buffer register for storing data prior to transfer to the bus or the external device.

Although there are actually five DL11 options, the prime functional differences can be shown by presenting three typical cases: a DL11 used for dataset devices, a DL11 used as a Teletype control, and a DL11 used with EIA level converters. Each of these three cases is covered separately in Paragraphs 2.4.1 through 2.4.3, respectively.

2.4.1 DL11 Dataset Interface

Only the DL11-E (Figure 2-2) option can be used to interface to datasets. The DL11 uses call and acknowledge signals from the computer and the dataset, translates these signals to set up a handshaking sequence, and thus establish a data communication channel.

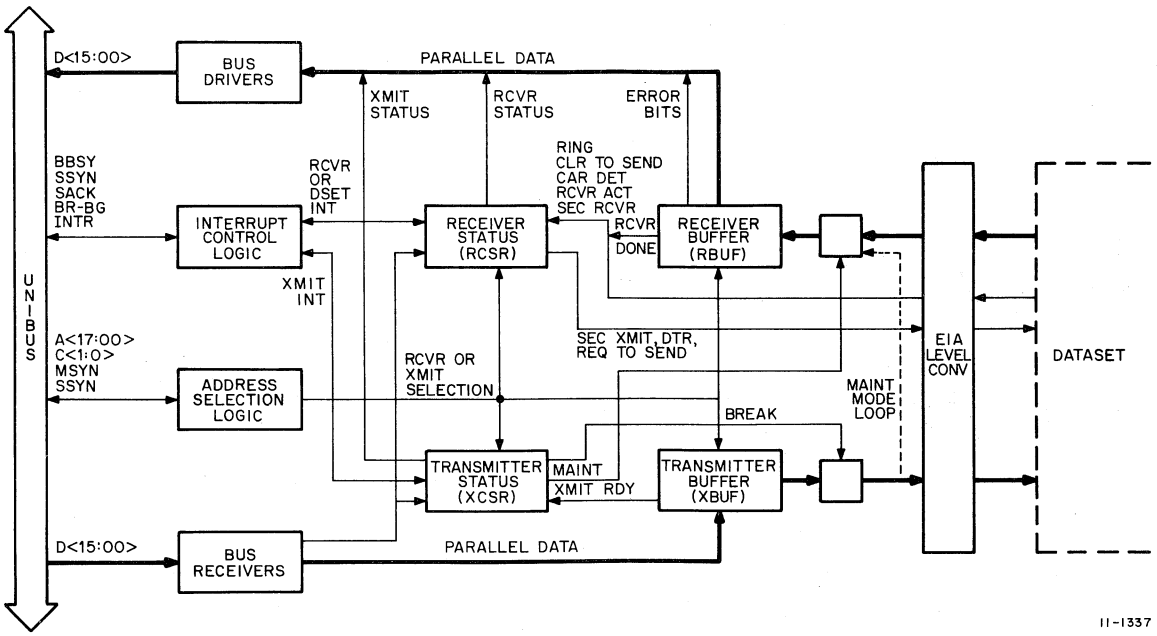

Figure 2-2 DL11-E Block Diagram

A typical method of establishing a data communication channel is as follows: the dataset at the computer is called by another remote dataset and a RING signal is transmitted to the DL11 interface. This RING signal initiates an interrupt provided the DATASET INT ENB bit in the DL11 register is set. The program then determines if the interrupt was caused by RING and, through a service routine, issues a DATA TERMINAL READY and a REQ TO SEND signal. These signals cause the dataset to answer the call and send a carrier signal or tone to the caller. The caller acknowledges the carrier signal with its own carrier signal which, when detected by the dataset, causes another interrupt (CARRIER) sequence to be initiated. Upon recognizing the CARRIER interrupt, the program can then either receive or transmit data. The only two prerequisites for the handshaking sequence are that the program use appropriate service routines and that the DATASET INT ENB bit in the DL11 status register is set prior to setting up the data channel.

Once the data channel is set up, the DL11-E receiver accepts incoming serial data from the dataset lines for parallel conversion and transfer to the Unibus. The transmitter converts parallel data from the bus and shifts the resultant serial data onto the dataset lines.

The receiver offers serial-to-parallel conversion of 5, 6, 7, or 8 level codes. This serial character code is described in Paragraph 2.3. Once the character has been received, a parity error flag, if selected, is available to the programmer for testing. An interrupt request (RCVR DONE flag) is initiated in the middle of the first STOP bit of the character being received. This indicates that the character is stored in the receiver holding register. If the program does not transfer the character from the holding register before the middle of the first STOP bit of the next character, a data overflow error (OR ERR) bit is set in the receiver buffer register. This buffer also provides other error indications such as framing error (FR ERR) which indicates that the character had no valid STOP bit, and partiy error (P ERR) which indicates that the received parity did not agree with the expected parity. It should be noted that both the receiver and transmitter character length and format are controlled by jumpers on the module and are always identical.

The transmitter performs parallel-to-serial conversion of 5, 6, 7, or 8 level codes. Data from the Unibus is loaded in parallel into the holding register. When the transmitter shift register is empty, the contents of the holding register is shifted into the transmitter shift register and the XMIT RDY flag comes up. A second character from the bus can then be loaded into the holding register. However, because the shift register is still working on previous data, the shifting operation of the second character is delayed until the previous character has been completely transmitted. Once the last bit of a character is transferred to the dataset (because of double-buffering, this is actually the last bit of the first character in a 2-character pair), the interface initiates an interrupt request (XMIT RDY) to indicate that the buffer is empty and can now be loaded with another character for transfer to the dataset. The transmitter status register contains a BREAK bit that can be set to transmit a continuous space to the dataset. A maintenance (MAINT) bit is also available for connecting the serial output of the transmitter to the input of the receiver and to force the receiver clock speed to be the same as the transmitter speed.

The rest of the control portion of the DL11-E is available through the receiver status register, and provides the necessary command and monitoring functions for use with Bell 103 and 202 type datasets. This register monitors such functions as: CLEAR TO SEND, which indicates the operating condition of the dataset; CAR DET, which indicates that the carrier is being received; RCVR ACT, which indicates that the receiver is accepting a character; and RCVR DONE, which indicates that a full character is stored in the receiver buffer.

Dataset interrupt requests are initiated at the transition of RING, CAR DET, CLR TO SEND, or SEC REC signals. The SEC REC (secondary or supervisory received data) and the SEC XMIT (secondary or supervisory transmitted data) bits provide receive and transmit capabilities for the reverse channel of a remote station. The DTR bit functions as a control lead for the dataset communication channel and permits the channel to be either connected or disconnected.

The DL11-E option contains EIA level converters for changing the bipolar inputs to TTL logic levels and the TTL logic level outputs to the bipolar signals required by the dataset. The EIA converters provide failsafe operation of the control leads because they appear off if the dataset loses power.

2.4.2 DL11 Teletype Control

Both the DL11-A and DL11-C options can be used to interface Teletype units. The prime difference between the two is that the DL11-C can operate with a variable character format and is available in several different baud rates. The DL11-A option (Figure 2-3) is normally used to interface Model 33 and 35 Teletypes; the DL11-C option could be used to interface Model 28 Teletypes.

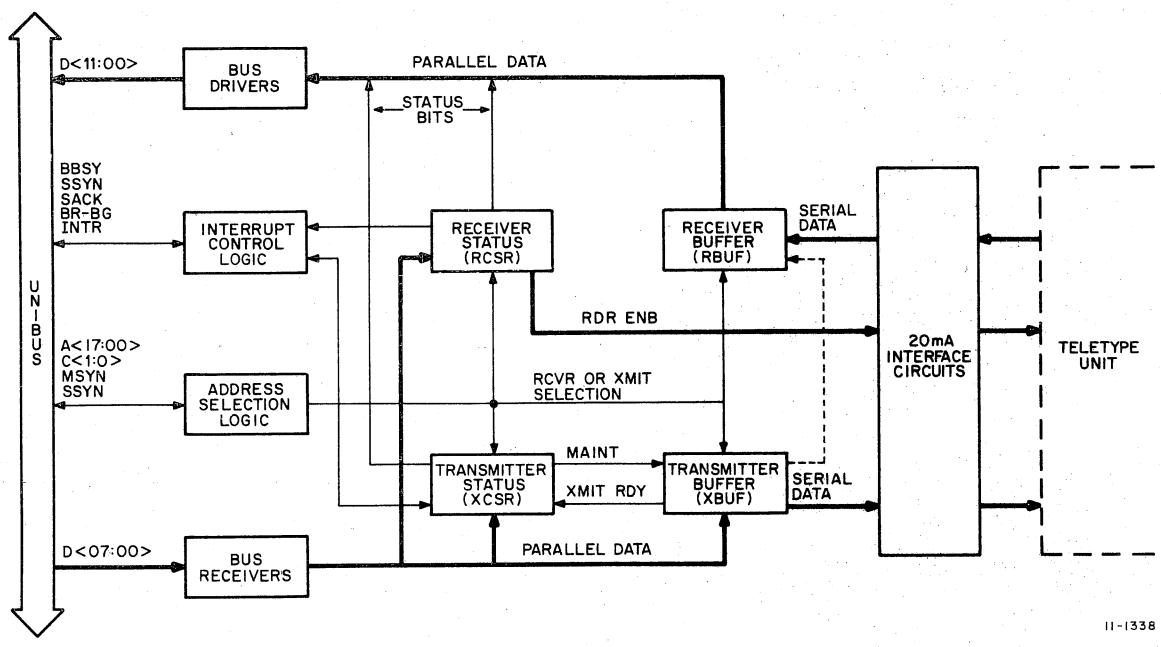

Figure 2-3 DL11-A Block Diagram

Serial information read or written by the Teletype unit is assembled or disassembled by the DL11 interface for parallel transfer to, or from, the Unibus. When the processor addresses the bus, the DL11 interface decodes the address to determine if the Teletype is the selected external device and, if selected, whether it is to perform an input (read) or output (punch) operation.

If, for example, the Teletype has been selected to accept information for printout, parallel data from the Unibus is loaded into the DL11 transmitter (punch) buffer. At this point, the XMIT RDY flag drops because the transmitter (punch) logic has been activated (the flag comes back after a fraction of a bit time if the transmitter is not presently active). The interface generates a START bit, shifts the data from the buffer into the Teletype one bit at a time, again sets the XMIT RDY flag (as soon as the holding register of the double-buffering is empty, even though the shift register is active), and then times out the required number of STOP bits.

Thus, if the DL11-A option is being used, the 8-bit parallel bus data is converted to the 11-bit serial input required by the Teletype. If the DL11-C option is used, the format and character length may be different, but the parallel-to-serial conversion is accomplished in the same manner. Note that whenever a series of characters is to be loaded into the Teletype, the XMIT RDY flag is set prior to generation of the STOP bits and the shifting out of the character in the holding register, thus allowing another character to be loaded from the bus as soon as the transmitter holding buffer is empty. The XMIT RDY flag is used to initiate an interrupt sequence to inform the processor that the interface is ready to transfer another character to the Teletype for printing.

When receiving data from the Teletype unit, the operation is essentially the reverse. The START bit of the Teletype serial data activates the interface receiver logic, and data is loaded one bit at a time into the reader buffer register. When loading of the buffer is complete, the buffer contents is transferred to the holding register and the interface sets the RCVR DONE flag, indicating to the program that a character has been assembled and is ready for transfer to the bus. The RCVR DONE flag, if RCVR INT ENB is also set, initiates an interrupt sequence, thereby causing a vectored interrupt.

The DL11-A and DL11-C options both have a reader enable (RDR ENB) bit that can be set to advance the paper-tape reader in the Teletype. When set, this bit clears the RCVR DONE flag. As soon as the Teletype sends another character, the START bit clears the RDR ENB bit, thus allowing just one character to be read.

The DL11-A and DL11-C options also have a receiver active (RCVR ACT) bit which indicates that the DL11 interface is receiving data from the Teletype. This bit is set at the center of the START bit, which is the beginning of the input serial data, and is cleared by the leading edge of the RCVR DONE bit. The DL11-C also has a BREAK bit which can be set by the program to transmit a continuous space to the Teletype.

The DL11-A and DL11-C options, as well as all other DL11 options, can be operated in a maintenance mode which is selected by the program by setting the MAINT bit in the transmitter status register. When in this mode, special logic is used to perform a closed loop test of interface logic circuits. A character from the bus is loaded in parallel into the transmitter (punch) buffer register. The serial output of this register, besides entering the Teletype, enters the receiver (reader) buffer register where it is converted back into parallel data and transferred to the bus. If the DL11 is functioning properly, the character in the reader buffer (RBUF) is identical to the character loaded into the transmitter buffer (XBUF).

2.4.3 DL11 EIA Terminal Control

Both the DL11-B and DL11-D options provide the control logic required for interfacing EIA terminals such as the VT06 Display or the Model 37 Teletype. The prime difference between these two options is that the DL11-D can operate with a variable format and is available in several baud rates.

Functionally, the DL11-B and DL11-D operate in an identical manner to the DL11-A and DL11-C, respectively (Paragraph 2.4.2). However, both the DL11-B and DL11-D options have additional logic consisting of EIA level converters for changing bipolar inputs to TTL logic levels and for changing the TTL logic level outputs to the bipolar signals required by EIA terminals.

2.5 PHYSICAL DESCRIPTION

The DL11 interface is packaged on a single M7800 Quad Intergrated Circuit Module that can easily be plugged into either a small peripheral controller slot in the processor or into one of the four slots in a DD11-A Peripheral Mounting Panel. When the DD11-A is used, up to four DL11 interfaces can be mounted in a single system unit.

Power is applied to the logic through the power harness already provided in the BA11 Mounting Box. The required current is approximately 1.8A at +5V and 150 mA at -15V. If one of the EIA options is used (DL11-B, D, or E), then 50 mA of current, at a level between +9V and +15V, is also required.

The M7800 module has a Berg connector for all user input/output signals. The specific signals fed to this connector depend on the particular option used. The signals transferred between the M7800 and the external device are dependent on the specific cable used with the selected option. Mounting, cabling, and connector information is given in Chapter 3.

The specific baud rate used with the DL11 interface is selected by a switch which taps off the frequency divider output of a crystal oscillator.

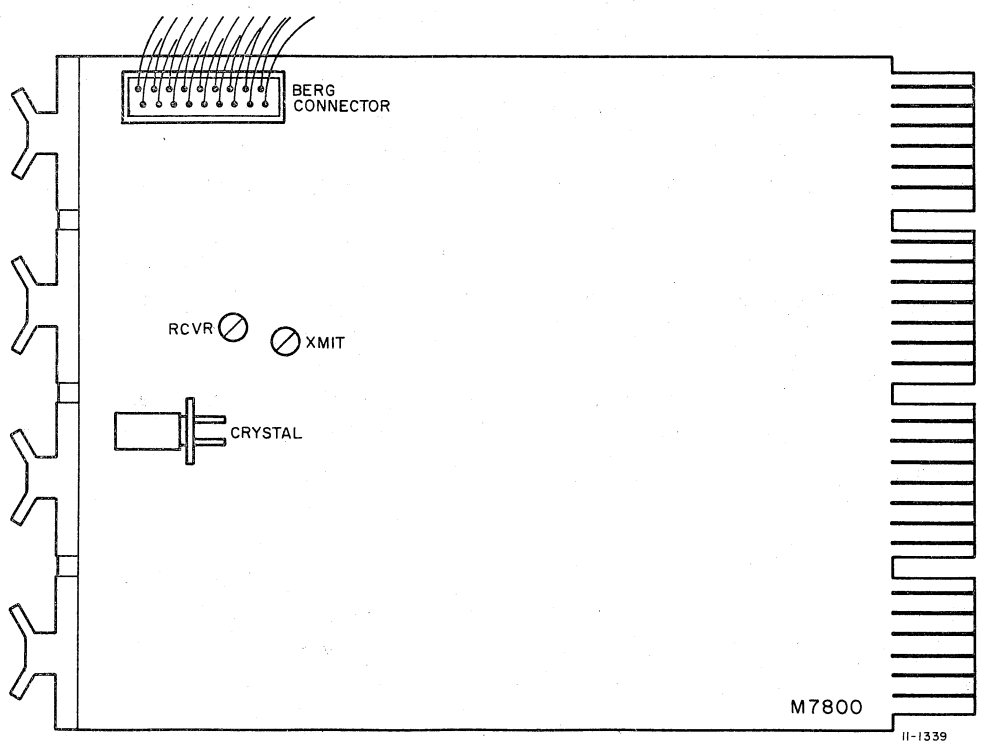

Figure 2-4 Crystal and Switch Location

One of four available crystals (1.03296 MHz, 844.8 kHz, 1.152 MHz, or 4.608 MHz) is mounted on the M7800 module as shown on Figure 2-4. The user may use a different crystal if desired, but the DL11 operating speed is limited from 40 baud to 10K baud.

Figure 2-4 also shows the position of the two switches used to select the baud rate. Both switches are identical: one is used for the receiver portion of the interface, the other is used for the transmitter. Each switch is a 10-position rotary switch. Positions 9 and 10 are used to select an external clock. Positions 1 through 8 are used to select the baud rate from the crystal. The standard available baud rates selected by each switch position are listed in Table 2-2. A detailed description of the frequency division is given in Chapter 5 of this manual.

2.6 SPECIFICATIONS

Operating and physical specifications for the DL11 Asynchronous Line Interface are given in Table 2-4. Unless otherwise specified in the table, the specifications refer to all five DL11 options.

Table 2-4
DL11 Operating Specifications

Specification	Options	Description
Registers	All	Receiver Status Register (RCSR) Receiver Buffer Register (RBUF) Transmitter Status Register (XCSR) Transmitter Buffer Register (XBUF)
Register Addresses	DL11-A or DL11-B	RCSR 777560 RBUF 777562 XCSR 777564 XBUF 777566 } when used as console
		RCSR 776XX0 RBUF 776XX2 XCSR 776XX4 XBUF 776XX6 } XX = 50 through 67 for up to 16 interfaces
	DL11-C, D, or E	RCSR 77XXX0 RBUF 77XXX2 XCSR 77XXX4 XBUF 77XXX6 } XXX = 561 through 617 for up to 31 interfaces
Interrupt Vector Address	DL11-A or DL11-B	060 = Receiver 064 = Transmitter } when used as console
	All	Floating Vectors (Appendix B)
Priority Level	DL11-A, B, C, D, or E	BR4 (may be changed by jumper plug)

(continued on next page)

Table 2-4 (Cont)
DL11 Operating Specifications

Specification	Options	Description
Interrupt Types	DL11-A, B, C, or D	Transmitter Ready (XMIT RDY) Receiver Done (RCVR DONE)
	DL11-E	Transmitter Ready (XMIT RDY) Receiver Done (RCVR DONE) Dataset Interrupt (DATASET INT) which is caused by one of the following: CAR DET (carrier detect) RCV ACT (receiver active) SEC REC (secondary receiver) RING (ringing signal)
Commands	DL11-A, B	Receiver Interrupt Enable (RCVR INT ENB) Transmitter Interrupt Enable (XMIT INT ENB) Reader Enable (RDR ENB) Maintenance Mode (MAINT)
	DL11-C, D	All of the above commands plus BREAK.
	DL11-E	All of the above commands plus the following commands: Dataset Interrupt Enable (DATASET INT ENB) Secondary Transmit (SEC XMIT) Request to Send (REQ TO SEND) Data Terminal Ready (DTR)
Status Indications	DL11-A, B	Receiver Active (RCVR ACT) Transmitter Ready (XMIT RDY) Receiver Done (RCVR DONE)
	DL11-C, D	Same as DL11-A plus the following: Error (ERROR) Overrun (OR ERR) Framing Error (FR ERR) Parity Error (P ERR)
	DL11-E	Same as DL11-C plus the following: Clear to Send (CLR TO SEND) Carrier Detect (CAR DET) Secondary Receive (SEC REC) Ring (RING)

(continued on next page)

Table 2-4 (Cont)
DL11 Operating Specifications

Specification	Options	Description
Data Input and Output	DL11-A, C	Serial data, 20-mA active current loop.
	DL11-B, D	Serial data, conforms to EIA and CCITT specifications.
	DL11-E	Serial data, EIA and CCITT specifications, compatible with Bell 103 and 202 datasets.
Data Format	DL11-A, B	1 START bit, 8-bit DATA character, 1 or 2 STOP bits.
	DL11-C, D or E	1 START bit; 5, 6, 7, or 8 bit DATA character; PARITY bit (odd, even, or unused); 1, 1.5, or 2 STOP bits.
Data Rates	DL11-A, B	Baud rate restricted to 110, 150, 300, 600, 1200, and 2400. No 1200/110 split.
	DL11-C, D, or E	Baud rate dependent on crystal used and switch position (Table 2-2).
Clock Rates	DL11-A, B	Crystal oscillator at one of two standard frequencies; 844.8 kHz or 1.152 MHz.
		External clock can be connected to two switch positions (9 and 10).
	DL11-C, D, or E	Crystal oscillator at one of four standard frequencies: 1.03296 MHz, 844.8 kHz, 1.152 MHz, or 4.608 MHz.
		External clock can be connected to two switch positions (9 and 10).
		Special crystal frequencies can be ordered from DEC.
Bit Transfer Order	All	Low-order bit (LSB) first.
Parity	DL11-C, D, or E	Computed on incoming data or inserted on outgoing data dependent on type of parity (odd or even) used.
		Parity may be odd, even, or unused.
Size	All	Consists of a single quad module (M7800) that occupies ¼ of a DD11-A or one of two controller slots in a KA11, KC11, or other PDP-11 processor system unit.

(continued on next page)

Table 2-4 (Cont)
DL11 Operating Specifications

Specification	Options	Description
Cables	DL11-A, C	One 7008360 cable (2-ft length) with Berg connector for mating to M7800 and female Mate-N-Lok for mating to device.
	DL11-B, D, or E	One BC05C-25 (25-ft length) cable with Berg connector for mating to M7800 and male Cinch connector for mating to device.
Power Required	DL11-A, C	1.8A at +5V 150 mA at -15V
	DL11-B, D, or E	1.8A at +5V 150 mA at -15V 50 mA at level between +9V and +15V

CHAPTER 3
INSTALLATION AND CONFIGURATION

3.1 INTRODUCTION

This chapter describes the physical components which constitute each of the five DL11 Asynchronous Line Interface options, and methods of mounting and connecting the DL11 to other devices. The chapter is divided into three major parts: configuration, installation, and cabling.

3.2 CONFIGURATION

Each DL11 option basically consists of an M7800 quad module, either a standard crystal (one of four available from DEC) or a special crystal (also available from DEC), and associated cabling. The specific components of each of the five options are listed in Table 3-1.

Although general operation of the M7800 is similar for each option, specific functions of this module differ from option to option. This is due partially to the jumpers which may be added to or removed from the logic to enable or disable certain signals, partially due to the specific cable used with the module which may or may not connect all lines between the module and the external device, and partially due to the addition or deletion of certain discrete components on the module so that the M7800 can perform the logic functions required for a particular option. In effect, there are five different versions of the M7800.

The crystals covered in Table 3-1 are the standard crystals available from DEC. The customer may substitute a special crystal, if desired. However, the resultant baud rate must remain within the range of 40 baud to 10K baud. Derivation of baud rates from the crystal oscillator frequency divider logic is described in Chapter 5.

3.3 INSTALLATION

The DL11 interface can be mounted in either a small peripheral controller slot in the PDP-11 processor or in one of the four slots in a DD11-A Peripheral Mounting Panel as shown in Figure 3-1. Note that the DL11 can be mounted in any one of the four slots and up to four DL11 interfaces can be mounted in a single system unit.

A DL11 interface can also be mounted in one of the four slots of a BB11 system unit, provided that slot has been wired as a DD11-A or equivalent. Once the M7800 module has been installed, the appropriate cable must be connected as described in Paragraph 3.4.

Table 3-1
Option Configurations

Option	Module	Cables	Crystal	Notes
DL11-A	M7800	7008360 (2-1/4 ft)	#1 or #3 only	Cable mates to Model 33 or Model 35 Teletype.
DL11-B	M7800	BC05C-25 (25 ft)	#1 or #3 only	
DL11-C	M7800	7008360 (2-1/4 ft)	#1, #2, #3, or #4	
DL11-D	M7800	BC05C-25 (25 ft)	#1, #2, #3, or #4	Model 37 Teletype, VT05, or VT06 null modem required.
DL11-E	M7800	BC05C-25 (25 ft)	#1, #2, #3, or #4	Cable mates to Bell 103 or 202 modem.

NOTES: 1. Crystal frequencies are: #1 = 844.8 kHz
#2 = 1.03296 MHz
#3 = 1.152 MHz
#4 = 4.608 MHz

2. Although each option uses an M7800 module, the signals supplied on the specific module depend on the option used.

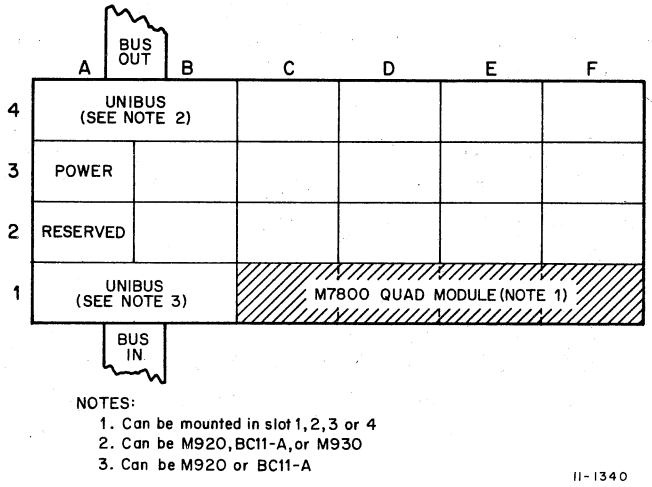

Figure 3-1 DL11 (M7800 module) Mounted in DD11-A

3.3.1 Power Connections

Power connections to the DL11 interface are provided by the associated PDP-11 system via the power supply in the BA11 mounting box. When power is applied to the PDP-11 system, the DL11 receives power also. These power connections are described in detail in the *PDP-11 Peripherals Handbook.*

When using the DL11-B, D, or E option, a positive voltage is required between 9 and 15V to operate the EIA drivers. For PDP-11/15 and PDP-11/20 systems with an H720 Power Supply, a G8000 module must be installed to provide this voltage. This module uses a filter network to convert the full-wave rectified +8V/rms signal to a positive dc voltage. Installation of the G8000 module is performed as follows:

1. Install the G8000 module into slot A02 of the DD11-A.
2. Connect a wire between A03V2 and A02V2.
3. Connect a wire between A02N2 and C*XX*U1 where *XX* is the slot location of the M7800 module.

3.3.2 Address and Priority Assignments

The DL11 interface is addressed through the address selection logic and its interrupt vector determined by the interrupt control logic. Each specific DL11 interface has a unique address and vector, both determined by jumpers on the M7800 module. Figure 3-2 shows the locations of the jumpers on the M7800 module. The addressing scheme is described in Paragraph 5.2 and the vector address (interrupt control) scheme is covered in Paragraph 5.3. The priority level is determined by the priority plug on the module and is normally a BR4 level for options DL11-A through DL11-D (refer to Engineering Drawing C-IA-5408776-0-0). However, this priority level may be changed, if desired, by changing the priority plug.

3.3.3 Installation Testing

Installation testing is performed by running the appropriate diagnostic program after the DL11 interface has been completely installed. This program is contained on the diagnostic tape supplied with the interface. Instructions for running the diagnostic are included with the program tape.

Depending on the option used, the following diagnostic programs are supplied:

a.	DL11-A option	KL11 Teletype Tests	MAINDEC-11-DZKLA
b.	DL11-B option	VT05 Tests	MAINDEC-11-DZVTB
c.	DL11-C option	Off-Line Test	MAINDEC-11-DZDLA
d.	DL11-D option	Off-Line Test	MAINDEC-11-DZDLA
e.	DL11-E option	Off-Line Test	MAINDEC-11-DZDLA
		On-Line Test	MAINDEC-11-DZDLB

3.4 CABLING

Figure 3-3 illustrates the method of connecting cables between the various DL11 options and associated external devices.

Table 3-2 lists the signal names and associated pins on the Berg connector mounted on the M7800 module. This table also lists the associated signals supplied on the 7008360 and BC05C cables.

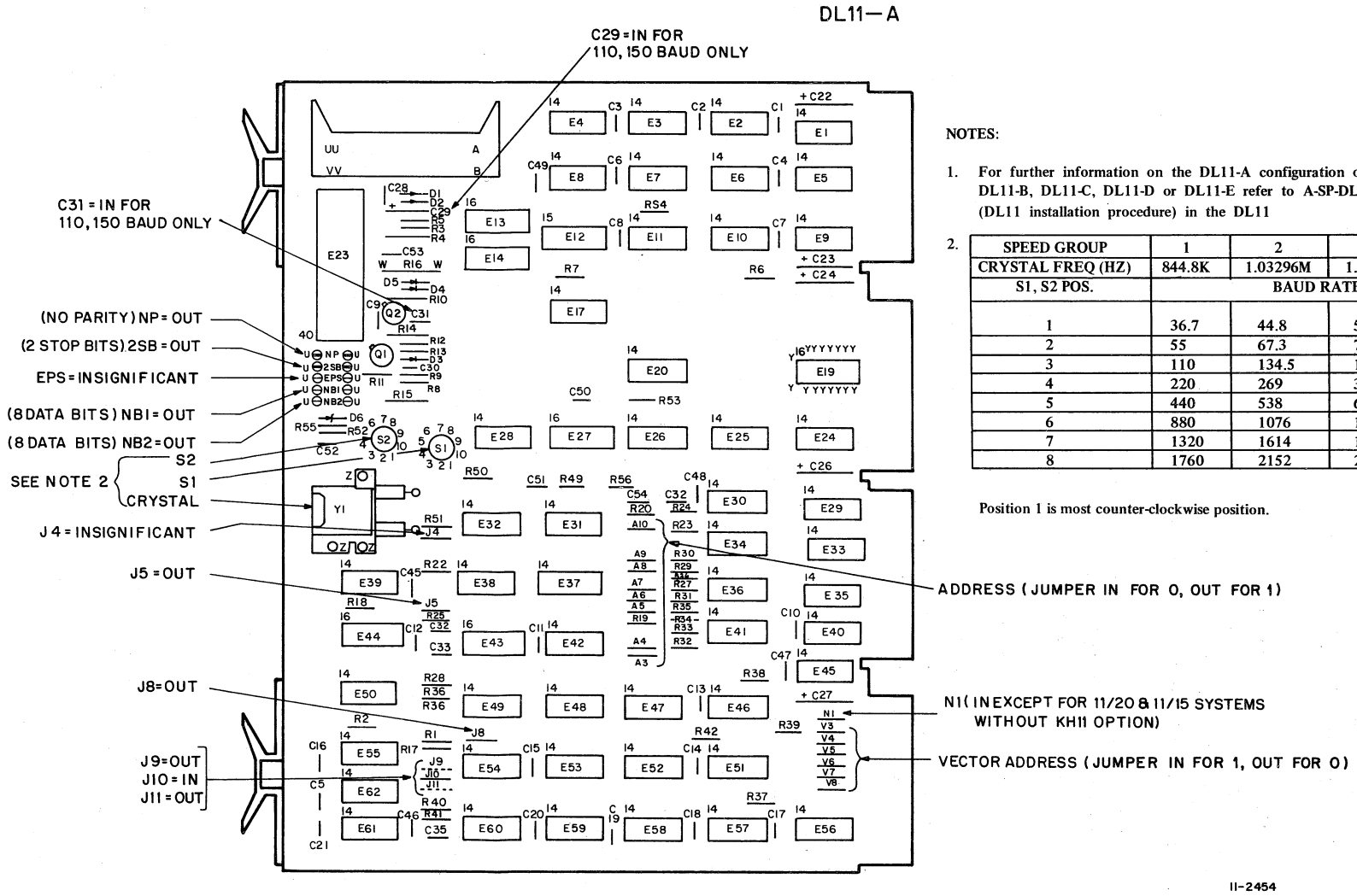

NOTES:

1. For further information on the DL11-A configuration or the installation of DL11-B, DL11-C, DL11-D or DL11-E refer to A-SP-DL11-0-2 (DL11 installation procedure) in the DL11

2.

SPEED GROUP	1	2	3	4
CRYSTAL FREQ (HZ)	844.8K	1.03296M	1.152M	4.608M
S1, S2 POS.	BAUD RATE			
1	36.7	44.8	50	200
2	55	67.3	75	300
3	110	134.5	150	600
4	220	269	300	1200
5	440	538	600	2400
6	880	1076	1200	4800
7	1320	1614	1800	7200
8	1760	2152	2400	9600

Position 1 is most counter-clockwise position.

Figure 3-2 Jumper Locations on the M7800 Module

Table 3-3 provides a quick reference of M7800 input/output signals for TTL, EIA, and 20-mA current loop devices.

Table 3-4 lists connector pin numbers and signals for the 7008360 cable.

Table 3-5 lists connector pin numbers and signals for the 7008519 cable connector which is used in conjunction with the 7008360 cable.

Table 3-6 lists connector pin numbers for the BC05C cable connectors.

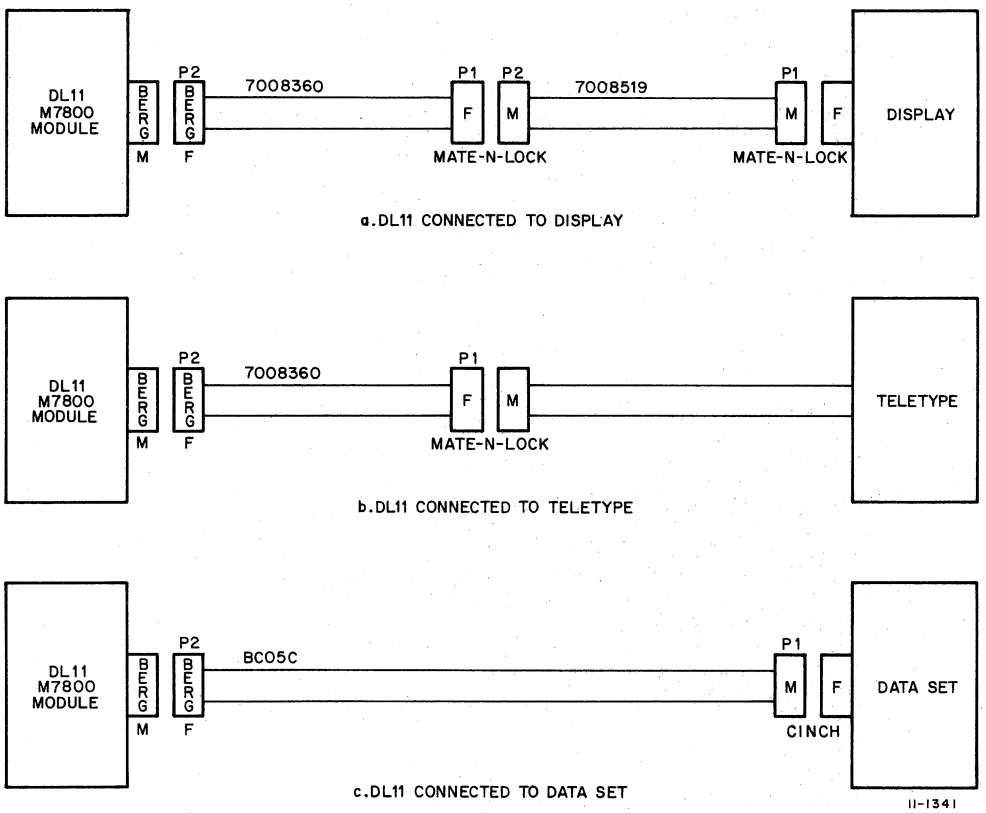

Figure 3-3 DL11 Cable Connections

Table 3-2
Pin Connections

Berg Pin	M7800 Module	BC05C Modem Cable	7008360 Cable
A	Ground	Ground	Ground
B	Ground	Ground	
C	Force Busy (EIA)	Force Busy	
D		Sec. Clear to Send	
E	Serial Input (TTL)	Interlock In	Interlock In
F	Serial Output (EIA)	Transmitted Data	
H	20 mA Interlock		Interlock Out
J	Serial Input (EIA)	Received Data	
K	Serial Input + (20 mA)		Received Data +
L		External Clock	
M	EIA Interlock	Interlock Out	
N		Serial Clock Xmit	
P		Sec. Request to Send	
R		Serial Clock Rcvr	
S	Serial Input - (20 mA)		Received Data -
T	Clear to Send (EIA)	Clear to Send	
U			
V	Request to Send (EIA)	Request to Send	
W		- Power	
X	Ring (EIA)	Ring	
Y		+ Power	
Z		Data Set Ready	
AA	Serial Output + (20 mA)		Transmitted Data +
BB	Carrier (EIA)	Carrier	
CC	Clock Input (TTL)		
DD	Data Terminal Rdy (EIA)	Data Terminal Ready	
EE	Reader Run - (20 mA)		Reader Run -
FF	Secondary Xmit (EIA)	202 Sec. Xmit	
HH	Berg Clock Enb		
JJ	Secondary Rec (EIA)	202 Sec. Rcvr	
KK	Serial Output - (20 mA)		Transmitted Data -
LL		EIA Sec. Xmit	
MM		Signal Quality	
NN		EIA Sec. Rcvr	
PP	Reader Run + (20 mA)		Reader Run +
RR		Signal Rate	
SS	Serial Output (TTL)		
TT	+5V		
UU	Ground	Ground	Ground
VV	Ground	Ground	Ground

Table 3-3
Input/Output Signals

Type	Signals		Pin No.
TTL Signals	INPUT:	Serial Data	E
		Clock	CC
		Clock Enable	HH
	OUTPUT:	Serial Data	SS
20-mA Current Loop Signals	INPUT:	+ Serial Data	K
		- Serial Data	S
	OUTPUT:	+ Serial Data	AA
		- Serial Data	KK
		+ Reader Run } (RDR ENB)	PP
		- Reader Run } (RDR ENB)	EE
EIA Signals	INPUT:	Serial Data	J
		Clear to Send	T
		Ring	X
		Carrier	BB
		Secondary Receive	JJ
	OUTPUT:	Serial Data	F
		Force Busy	C
		Request to Send	V
		Data Terminal Ready	DD
		Secondary Transmit	FF

Table 3-4
7008360 Connections

Twisted Pair	Color	Mate-N-Lok Connector P1 (To Device)	Berg Connector P2 (To DL11)	Signal
Black/Red	Black	2	KK	- Transmitted Data
	Red	3	S	- Received Data
Black/White	Black	4	EE	- Reader Run
	White	5	AA	+ Transmitted Data
Black/Green	Black	6	PP	+ Reader Run
	Green	7	K	+ Received Data
			black [E	Interlock In
			black [H	Interlock Out

NOTES: 1. Connector on ASR Teletype uses all pins (2–7).
2. Connector on KSR Teletype does not use pins 4 or 6 (Reader Run - and +).

Table 3-5
7008519 Connections

7008360 Mate-N-Lok Connector P1	Mate-N-Lok Connector P2 (To 7008360)	Color	Mate-N-Lok Connector P1 (To Device)	Signal
2	2	Black	2	- Transmitted Data
3	3	Red	3	- Received Data
4				
5	5	White	5	+ Transmitted Data
6				
7	7	Green	7	+ Received Data

Table 3-6
BC05C Connections

Color	Cinch Connector P1 (To Device)	Berg Connector P2 (To DL11)	Signal
Blue/White	1	A	Ground
		VV	Ground
White/Blue	2	F	Transmitted Data
Orange/White	3	J	Received Data
White/Orange	4 ← black	V	Request to Send
Green/White	5	T	Clear to Send
White/Green	6	Z	Data Set Ready
Brown/White	7	B	Ground
		UU	Ground
White/Brown	8	BB	Carrier
Slate/White	9	Y	+ Power
White/Slate	10	W	- Power
Blue/Red	11	FF	202 Secondary Transmit
Red/Blue	12	JJ	202 Secondary Receive
Orange/Red	13	D	Secondary Clear to Send
Slate/Red	14	LL	EIA Secondary Transmit
Slate/Green	15	N	Serial Clock Transmit
Red/Brown	16	NN	EIA Secondary Receive
Slate	17	R	Serial Clock Receive
Red/Slate	18	U	Unassigned
Blue/Black	19	P	Secondary Request to Send
Black/Blue	20	DD	Data Terminal Ready
Orange/Black	21	MM	Signal Quality
Black/Orange	22	X	Ring
Green/Black	23	RR	Signal Rate
Brown/Red	24	L	External Clock
Red/Orange	25	C	Force Busy
		red→ E	Interlock In
		M	Interlock Out

CHAPTER 4
PROGRAMMING INFORMATION

4.1 SCOPE

This chapter presents general programming information for software control of the DL11 Asynchronous Line Interface. Although a few typical program examples are included, it is beyond the scope of this manual to provide detailed programs. For more detailed information on programming in general, refer to the *Paper-Tape Software Programming Handbook*, DEC-11-XPTSA-A-D.

This chapter of the manual is divided into five major portions: device registers, interrupts, timing considerations, programming notes, programming examples.

4.2 DEVICE REGISTERS

All software control of the DL11 Asynchronous Line Interface is performed by means of four device registers. These registers have been assigned bus addresses and can be read or loaded (with the exceptions noted) using any PDP-11 instruction referring to their addresses. Address assignments can be changed by altering jumpers on the address selection logic to correspond to any address within the range of 774000 to 777777. However, register addresses for the various DL11 options normally fall within the range of 775610 to 776177 or 776500 to 776677. An explanation of the addressing scheme for the various options is covered in Chapter 5 of this manual. For the remainder of this discussion, it is assumed that a DL11-A option is being used as a Teletype (console) control. The description is valid for all options; only the specific device register address changes.

The four device registers and associated DL11-A addresses are listed in Table 4-1.

Table 4-1
Standard DL11 Register Assignments

Register	Mnemonic	Address*
Receiver Status Register	RCSR	777560
Receiver Buffer Register	RBUF	777562
Transmitter Status Register	XCSR	777564
Transmitter Buffer Register	XBUF	777566

*These addresses are only for the DL11-A or DL11-B option when used as a Teletype (console) control. For other address assignments for these registers, refer to Table 5-2.

Figures 4-1 through 4-4 show the bit assignments for the four device registers. Note that the number of bits within a specific register may vary, dependent on the particular option being used. However, when a specific bit is used in all options, it always retains the same bit position in the register.

The unused and load-only bits are always read as 0s. Loading unused or read-only bits has no effect on the bit position. The mnemonic INIT refers to the initialization signal issued by the processor. Initialization is caused by one of the following: issuing a programmed RESET instruction; depressing the START switch on the processor console; or the occurrence of a power-up or power-down condition of the processor power supply.

In the following descriptions, "transmitter" refers to those registers and bits involved in accepting a parallel character from the Unibus for serial transmission to the external device; "receiver" refers to those registers and bits involved with receiving serial information from the external device for parallel transfer to the Unibus.

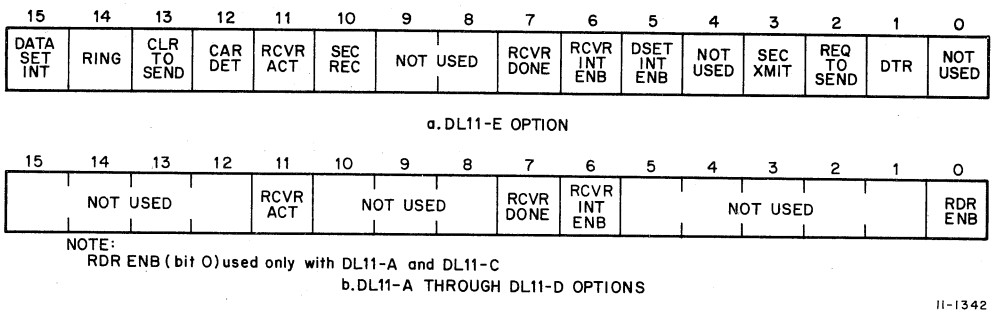

Figure 4-1 Receiver Status Register (RCSR) – Bit Assignments

Bit	Name	Option	Meaning and Operation
15	DATASET INT (Dataset Interrupt)	DL11-E only	This bit initiates an interrupt sequence provided the DATASET INT ENB bit (05) is also set. This bit is set whenever CAR DET, CLR TO SEND, or SEC REC changes state; i.e., on a 0 to 1 or 1 to 0 transition of any one of these bits. It is also set when RING changes from 0 to 1. Cleared by INIT or by reading the RCSR. Because reading the register clears the bit, it is, in effect, a "read-once" bit.
14	RING	DL11-E only	When set, indicates that a RINGING signal is being received from the dataset. Note that the RINGING signal is not a level but an EIA control signal with the cycle time as shown below: 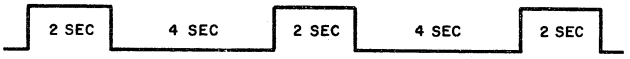 Read-only bit.

Bit	Name	Option	Meaning and Operation
13	CLR TO SEND (Clear to Send)	DL11-E only	The state of this bit is dependent on the state of the CLEAR TO SEND signal from the dataset. When set, this bit indicates an ON condition; when clear, it indicates an OFF condition. Read-only bit.
12	CAR DET (Carrier Detect)	DL11-E only	This bit is set when the data carrier is received. When clear, it indicates either the end of the current transmission activity or an error condition. Read-only bit.
11	RCVR ACT (Receiver Active)	All	When set, this bit indicates that the DL11 interface receiver is active. The bit is set at the center of the START bit which is the beginning of the input serial data from the device and is cleared by the leading edge of RCVR DONE. Read-only bit; cleared by INIT or by RCVR DONE (bit 07).
10	SEC REC (Secondary Receive or Supervisory Received Data)	DL11-E only	This bit provides a receive capability for the reverse channel of a remote station. A space (+6V) is read as a 1. (A transmit capability is provided by bit 03.) Read-only bit; cleared by INIT.
9–8	Unused	All	Not applicable.
07	RCVR DONE (Receiver Done)	All	This bit is set when an entire character has been received and is ready for transfer to the Unibus. When set, initiates an interrupt sequence provided RCVR INT ENB (bit 06) is also set. Cleared whenever the receiver buffer (RBUF) is addressed or whenever RDR ENB (bit 00) is set. Also cleared by INIT. Read-only bit.
06	RCVR INT ENB (Receiver Interrupt Enable)	All	When set, allows an interrupt sequence to start when RCVR DONE (bit 07) sets. Read/write bit; cleared by INIT.
05	DATASET INT ENB (Dataset Interrupt Enable)	DL11-E only	When set, allows an interrupt sequence to start when DATASET INT (bit 15) sets. Read/write bit; cleared by INIT.
04	Unused	All	Not applicable.

Bit	Name	Option	Meaning and Operation
03	SEC XMIT (Secondary Transmit or Supervisory Transmitted Data)	DL11-E only	This bit provides a transmit capability for a reverse channel of a remote station. When set, transmits a space (+6V). (A receive capability is provided by bit 10.) Read/write bit; cleared by INIT.
02	REQ TO SEND (Request to Send)	DL11-E only	A control lead to the dataset which is required for transmission. A jumper ties this bit to REQ TO SEND or FORCE BUSY in the dataset. Read/write bit; cleared by INIT.
01	DTR (Data Terminal Ready)	DL11-E only	A control lead for the dataset communication channel. When set, permits connection to the channel. When clear, disconnects the interface from the channel. Read/write bit; must be cleared by the program, is *not* cleared by INIT. **NOTE** **The state of this bit is not defined after power-up.**
00	RDR ENB (Reader Enable)	All	When set, this bit advances the paper-tape reader in ASR Teletype units and clears the RCVR DONE bit (bit 07). This bit is cleared at the middle of a START bit which is the beginning of the serial input from an external device. Also cleared by INIT. Only the DL11-A and DL11-C options connect to the 20-mA current loop. Write-only bit.

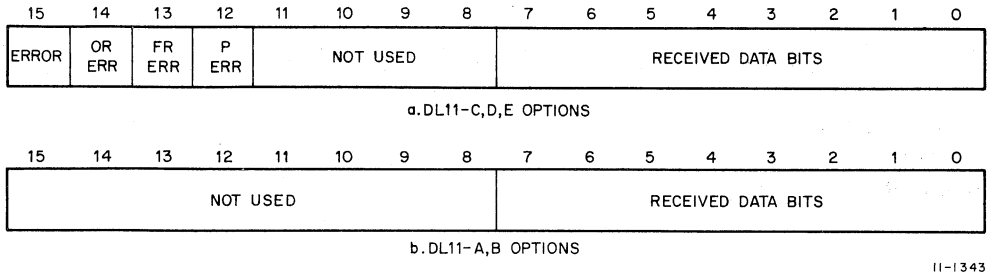

Figure 4-2 Receiver Buffer Register (RBUF) – Bit Assignments

Bit	Name	Option	Meaning and Operation
15	ERROR (Error)	DL11-C,D,E only	Used to indicate that an error condition is present. This bit is the logical OR of OR ERR, FR ERR, and P ERR (bits 14, 13, and 12, respectively). Whenever one of these bits is set, it causes ERROR to set. This bit is *not* connected to the interrupt logic. Read-only bit; cleared by removing the error-producing condition.
			NOTE **Error indications remain present until the next character is received, at which time the error bits are updated. INIT does not necessarily clear the error bits.**
14	OR ERR (Overrun Error)	DL11-C,D,E only	When set, indicates that reading of the previously received character was not completed (RCVR DONE not cleared) prior to receiving a new character. Read-only bit. Cleared in the same manner as ERROR (bit 15).
13	FR ERR (Framing Error)	DL11-C,D,E only	When set, indicates that the character that was read had no valid STOP bit. Read-only bit. Cleared in the same manner as ERROR (bit 15).
12	P ERR (Parity Error)	DL11-C,D,E only	When set, indicates that the parity received does not agree with the expected parity. This bit is always 0 if no parity is selected. Read-only bit. Cleared in the same manner as ERROR (bit 15).
11–08	Unused	All	Not applicable.
07–00	RECEIVED DATA BITS	All	Holds the character just read. If less than eight bits are selected, then the buffer is right-justified into the least significant bit positions. In this case, the higher unused bit or bits read as 0s. Read-only bits; *not* cleared by INIT.

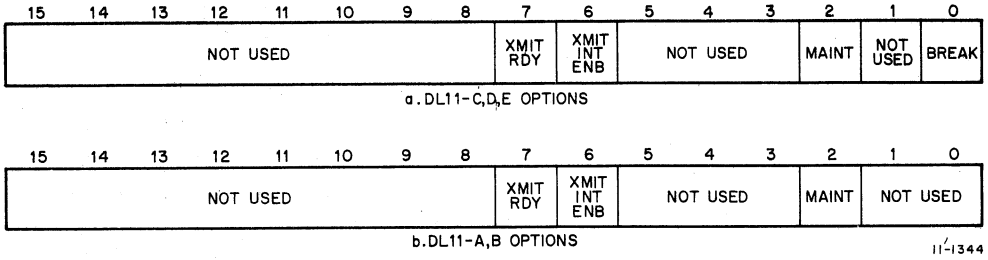

Figure 4-3 Transmitter Status Register (XCSR) – Bit Assignments

Bit	Name	Option	Meaning and Operation
15–08	Unused	All	Not applicable.
07	XMIT RDY (Transmitter Ready)	All	This bit is set when the transmitter buffer (XBUF) can accept another character. When set, it initiates an interrupt sequence provided XMIT INT ENB (bit 06) is also set. Read-only bit. Set by INIT. Cleared by loading the transmitter buffer.
06	XMIT INT ENB (Transmitter Interrupt Enable)	All	When set, allows an interrupt sequence to start when XMIT RDY (bit 07) sets. Read/write bit; cleared by INIT.
05–03	Unused	All	Not applicable.
02	MAINT (Maintenance)	All	Used for maintenance function. When set, disables the serial line input to the receiver and connects the transmitter output to the receiver input which disconnects the external device input. It also forces the receiver to run at transmitter speed. Read/write bit; cleared by INIT.
01	Unused	All	Not applicable.
00	BREAK	DL11-C,D,E, only	When set, transmits a continuous space to the external device. Read/write bit; cleared by INIT.

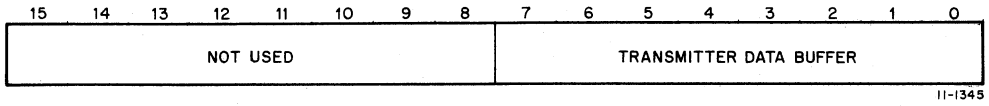

Figure 4-4 Transmitter Buffer Register (XBUF) – Bit Assignments

Bit	Name	Option	Meaning and Operation
15–08	Unused	All	Not applicable.
07–00	TRANSMITTER DATA BUFFER	All	Holds the character to be transferred to the external device. If less than eight bits are used, the character must be loaded so that it is right-justified into the least significant bits. Write-only bits.

4.3 INTERRUPTS

The DL11 Interface uses BR interrupts to gain control of the bus to perform a vectored interrupt, thereby causing a branch to a handling routine. The DL11 has two interrupt channels: one for the receiver section and one for the transmitter section. These two channels operate independently; however, if simultaneous interrupt requests occur, the receiver has priority. In addition, the DL11-E (dataset option) receiver section handles multiple source interrupts.

A transmitter interrupt can occur only if the interrupt enable bit (XMIT INT ENB) in the transmitter status register is set. With XMIT INT ENB set, setting the transmitter ready (XMIT RDY) bit initiates an interrupt request. When XMIT RDY is set, it indicates that the transmitter buffer is empty and ready to accept another character from the bus for transfer to the external device.

A receiver data interrupt can occur only if the interrupt enable (RCVR INT ENB) bit in the receiver status register is set. With RCVR INT ENB set, setting the receiver done (RCVR DONE) bit initiates an interrupt request. When RCVR DONE is set, it indicates that an entire character has been received and is ready for transfer to the bus. The additional interrupt request sources for the DL11-E option are discussed in the following paragraphs.

The receiver portion of the DL11-E dataset option handles multiple source interrupts. One of the receiver interrupt circuits is activated by RCVR INT ENB and RCVR DONE. The additional interrupt circuit can cause an interrupt only if the dataset interrupt enable bit (bit 05, DATASET INT ENB) in the receiver status register is set. With DATASET INT ENB set, setting the DATASET INT bit initiates an interrupt request. The DATASET INT bit can be set by one of four other bits: CAR DET, CLR TO SEND, SEC REC, or RING.

When servicing an interrupt for one condition, if a second interrupt condition develops, a unique second interrupt, as well as all subsequent interrupts, may not occur. To prevent this, either all possible interrupt conditions should be checked after servicing one condition or both interrupt enable bits (bits 05 and 06) should be cleared upon entry to the service routine for vector XX0 and then set again at the end of service.

The interrupt priority level is 4 for all options, with the receiver having a slightly higher priority than the transmitter in all cases. Note that the priority level can be changed with a priority plug.

Floating vector addresses are used for all options and are assigned according to the method described in Paragraph 5.3. If the DL11-A or B option is used as a console, then the vector address is 060. The vector address can be changed by jumpers in the interrupt control logic.

Any DEC programs or other software referring to the standard BR level or vector addresses must also be changed if the priority plug or vector address is changed.

4.4 TIMING CONSIDERATIONS

When programming the DL11 Asynchronous Line Interface, it is important to consider timing of certain functions in order to use the system in the most efficient manner. Timing considerations for the receiver, transmitter, and break generation logic are discussed in the following paragraphs.

4.4.1 Receiver

The RCVR DONE flag (bit 07 in the RCSR) sets when the Universal Asynchronous Receiver/Transmitter (UART) has assembled a full character. This occurs at the middle of the first STOP bit. Because the UART is double buffered, data remains valid until the next character is received and assembled. This permits one full character time for servicing the RCVR DONE flag.

4.4.2 Transmitter

The transmitter section of the UART is also double buffered. The XMIT RDY flag (bit 07 in the XCSR) is set after initialization. When the buffer (XBUF) is loaded with the first character from the bus, the flag clears but then sets again within a fraction of a bit time. A second character can then be loaded, which clears the flag again. The flag then remains cleared for nearly one full character time.

4.4.3 Break Generation Logic

When the BREAK bit (bit 00 in the XCSR of DL11-C, D, and E options) is set, it causes transmission of a continuous space. Because the XMIT RDY flag continues to function normally, the duration of a break can be timed by the pseudo-transmission of a number of characters. However, because the transmitter section of the UART is double buffered, a null character (all 0s) should precede transmission of the break to ensure that the previous character clears the line. In a similar manner, the final pseudo-transmitted character in the break should be null.

4.5 PROGRAM NOTES

The following notes pertain to programming the DL11 interface and contain information that may be useful to the programmer. More detailed programming information is given in the *Paper Tape Software Programming Handbook*, DEC-11-XPTSA-A-D and in the individual program listings.

a. **Character Format** – The character formats for the different DL11 options are given below. Note that when less than eight DATA bits are used, the character must be right-justified to the least significant bit. The character format pertains to both the receiver and the transmitter.

   1. *DL11-A and B Options* – A character consists of a START bit, eight DATA bits, and 1 or 2 STOP bits.

   2. *DL11-C, D, and E Options* – A character consists of a START bit, five to eight DATA bits, 1, 1.5, or 2 STOP bits and the option of PARITY (odd or even) or no parity.

b. **Maintenance Mode** – The maintenance mode is selected by setting the MAINT bit (bit 02) in the XCSR. In this mode, the interface disables the normal input to the receiver and replaces it with the output of the transmitter. The programmer can then load various bits into the transmitter and read them back from the receiver to verify proper operation of the DL11 logic circuits.

4.6 PROGRAM EXAMPLE

The following is an example of a typical program that can be used as an echo program for a Type 103 dataset. When a remote terminal dials in, this program answers the call and provides a character-by-character echo. Characters are also copied onto the console device.

```
        000200                          .=200
000200  000167  001616          START:  JMP     BEGIN           ;JUMP TO BEGINNING OF PROGRAM

                                ;SYMBOL DEFINITIONS

        040000                  RING=   040000                  ;BIT 14 OF RCSR, RING
        020000                  CTS=    020000                  ;BIT 13 OF RCSR, CLEAR TO SEND
        000200                  RDONE=  000200                  ;BIT 07 OF RCSR, RECEIVER DONE
        000002                  DTR=    000002                  ;BIT 01 OF RCSR, DATA TERMINAL READY
        000200                  XRDY=   000200                  ;BIT 07 OF XCSR, TRANSMITTER READY

        002000                          .=2000
002000  175610                  RCSR:   175610                  ;CSR OF RECEIVER
002002  175612                  RBUF:   175612                  ;BUF OF RECEIVER
002004  175614                  XCSR:   175614                  ;CSR OF TRANSMITTER
002006  175616                  XBUF:   175616                  ;BUF OF TRANSMITTER
002010  177564                  CXCSR:  177564                  ;CSR OF CONSOLE TRANSMITTER
002012  177566                  CXBUF:  177566                  ;BUF OF CONSOLE TRANSMITTER
002014  000000                  BUFFER: 0                       ;HOLDS CHARACTER RECEIVED
002016  000000                  DELAY:  0                       ;HOLDS DELAY COUNT, HIGH ORDER
002020  000000                          0                       ;HOLDS DELAY COUNT, LOW ORDER

                                ;BEGINNING OF ECHO PROGRAM

002022  005077  177752          BEGIN:  CLR     @RCSR           ;START BY INITIALIZING ALL BITS TO ZERO

002026  032777  040000  177744  LOOP1:  BIT     #RING,@RCSR     ;CHECK FOR INCOMING CALL
002034  001774                          BEQ     LOOP1           ;BRANCH IF PHONE IS NOT RINGING
002036  052777  000002  177734          BIS     #DTR,@RCSR      ;PHONE IS RINGING, SO ANSWER WITH DTR
002044  012767  000005  177744          MOV     #5,DELAY        ;SET UP COUNT FOR DELAY

002052  032777  020000  177720  LOOP2:  BIT     #CTS,@RCSR      ;CHECK FOR CLEAR TO SEND
002060  001007                          BNE     LOOP3           ;BRANCH IF ON
002062  162767  000001  177730          SUB     #1,DELAY+2      ;CHECK DELAY
002070  005667  177722                  SBC     DELAY           ;DECREMENT A TWO-WORD INTEGER
002074  001752                          BEQ     BEGIN           ;BRANCH IF WE HAVE WAITED TOO LONG
002076  000765                          BR      LOOP2           ;BRANCH AND CONTINUE TO WAIT FOR CTS

002100  032777  020000  177672  LOOP3:  BIT     #CTS,@RCSR      ;IS CHANNEL STILL ESTABLISHED?
002106  001745                          BEQ     BEGIN           ;BRANCH IF CTS NOT PRESENT
002110  032777  000200  177662          BIT     #RDONE,@RCSR    ;CHECK FOR RECEIVED CHARACTER
002116  001770                          BEQ     LOOP3           ;BRANCH IF NO CHARACTER RECEIVED
002120  017767  177656  177666          MOV     @RBUF,BUFFER    ;READ RECEIVED CHARACTER INTO BUFFER

002126  032777  000200  177650  LOOP4:  BIT     #XRDY,@XCSR     ;CHECK FOR TRANSMITTER READY
002134  001774                          BEQ     LOOP4           ;BRANCH IF NOT READY
002136  016777  177652  177642          MOV     BUFFER,@XBUF    ;TRANSMIT CHARACTER TO REMOTE TERMINAL

002144  032777  000200  177636  LOOP5:  BIT     #XRDY,@CXCSR    ;CHECK FOR CONSOLE TRANSMITTER READY
002152  001774                          BEQ     LOOP5           ;BRANCH IF NOT READY
002154  016777  177634  177630          MOV     BUFFER,@CXBUF   ;TRANSMIT CHARACTER TO CONSOLE
002162  000746                          BR      LOOP3           ;BRANCH AND WAIT FOR NEXT CHARACTER
```

CHAPTER 5
DETAILED DESCRIPTION

5.1 INTRODUCTION

This chapter provides a detailed description of the DL11 Asynchronous Line Interface. The discussions in this chapter are supported by a complete set of engineering drawings contained in a companion volume entitled *DL11 Asynchronous Line Interface, Engineering Drawings.*

The complete DL11 interface may be divided into 11 functional areas; each of these areas is covered separately in subsequent paragraphs. Table 5-1 lists each functional unit, the option number to which it applies, and the general purpose of the unit. A description of the prime differences among options (baud rates, code, operation, etc.) is presented in Chapter 2.

Table 5-1
DL11 Functional Units

Functional Unit	Options	Purpose
Selection Logic	A – E	Determines if the DL11 interface has been selected for use and what type of operation (transmit or receive) has been selected. Permits selection of one of four internal registers and determines if the register is to perform an input or output function.
Interrupt Logic	A – E	Permits the interface to gain bus control and perform a program interrupt. Either the receiver or transmitter can issue an interrupt request. The DL11-E option can issue a dataset interrupt in addition to the two other interrupts. Priority level of bus request (BR) line can be changed by the user.
Register Logic	A – E	Four internal registers, addressable by the program, provide data transfer, command and control, and status monitoring functions for the interface. Although all options have the same registers, the number of bits used may differ from option to option. However, bit positions of specific bits do not change.

(continued on next page)

Table 5-1 (Cont)
DL11 Functional Units

Functional Unit	Options	Purpose
Transmitter Control Logic	A – E	Provides necessary input control signals for the UART when it is used to convert parallel data from the bus to serial data required by the external device. Typical signals include: data strobe, clock frequency, and parity select.
Receiver Control Logic	A – E	Provides necessary input control signals for the UART when it is used to convert serial data to the parallel data required for transmission to the bus. Typical signals include: data enable, status word, and clock frequency.
Universal Asynchronous Receiver/Transmitter (UART)	A – E	Performs the necessary serial-to-parallel or parallel-to-serial conversion on the data and supplies control and error detecting bits.
Clock Logic	A – E	Determines the clock frequency and, therefore, the baud rates for the transmitter and receiver sections of the UART. Eight baud rates are derived from a single crystal. One of four standard crystals is offered with the options.
Maintenance Mode Logic	A – E	Performs a closed loop test of the DL11 control logic by tying the serial output of the transmitter into the receiver input and forces the receiver clock to be the same frequency as the transmitter clock.
Break Generation Logic	C, D, E	Permits the transmission of a continuous space or "break." The duration of the break can be timed by the pseudo-transmission of a specific number of characters.
EIA Logic	B, D, E	Provides necessary level converters for use with EIA levels.
Dataset Logic	E only	Provides full EIA dataset control. Monitors such dataset lines as RECEIVE DATA, SEC RECEIVE DATA, CARRIER DETECT, RING, and CLEAR TO SEND. Permits program to control TRANSMITTED DATA, DATA TERMINAL READY, REQUEST TO SEND, and SEC XMIT DATA.

5.2 ADDRESS SELECTION

The address selection logic (Drawing DL-5) decodes the incoming address information from the bus and provides the signals that determine which register has been selected and whether it is to perform an input or output function. Jumpers on the logic can be altered so that the module responds to any address within the range of 774000 to 777777. However, standard address assignments for the various DL11 options normally fall within the ranges of 775610 to 776177 or 776500 to 776677.

The standard address assignments for all DL11 options are listed in Table 5-2. Note that these addresses provide for 16 additional units when using the DL11-A or B, and 31 additional units when using the DL11-C, D, or E. For the purpose of clarity, the following discussion assumes that a DL11-A is being used as a Teletype (console) control.

When the DL11-A or DL11-B is to be used as a Teletype (console) control, jumpers are arranged so that the module responds only to standard device register addresses 777560, 777562, 777564, and 777566 (jumpers in bit positions 3 and 7). Although these addresses have been selected by DEC as the standard assignments for the

Table 5-2
DL11 Address Assignments

Option	Unit	Address	Remarks
DL11-A or B	Console	777560 777562 777564 777566	
	Unit #1	776XX0 776XX2 776XX4 776XX6	XX = 50 for Unit #1 51 for Unit #2 52 for Unit #3
	.		.
	.		.
	.		.
	.		.
	.		.
			67 for Unit #16
	Unit #16	776XX0 776XX2 776XX4 776XX6	
DL11-C, D, or E	Unit #1	77XXX0 77XXX2 77XXX4 77XXX6	XXX = 561 for Unit #1 562 for Unit #2 563 for Unit #3
	.		.
	.		.
	.		.
	.		.
	.		.
	.		.
	.		.
	.		.
			.
	Unit #31	77XXX0 77XXX2 77XXX4 77XXX6	617 for Unit #31

DL11 when used as a Teletype control, the user may change the jumpers to any address desired. However, any MAINDEC program or other software that references these DL11 standard assignments must also be modified accordingly if other than the standard assignments are used.

The first five octal digits of the address (77756) indicate that the DL11 has been selected as the device to be used. The final octal digit, consisting of address lines A02, A01, and A00, determines which register has been selected and whether a word or byte operation is to be performed. The two mode control lines, C00 and C01, determine whether the selected register is to perform an input or output operation (provided the selected register is a read/write register).

The address decoding is performed by a series of logic gates that provide the inputs to a 4-line to 10-line decoder circuit (7442 IC chip). Basically, the state of the four input lines provides a signal on one of the 10 output lines (only 7 of the 10 output lines are used in the DL11). A detailed schematic, truth table, and packaging diagram are provided in Appendix A.

Three of the input lines (IC pins 15, 14, and 13) are true or false dependent on the state of input lines BUS A01, BUS A02, and BUS C1, respectively. Lines BUS A01 and BUS A02 are used for selecting one of four registers and line BUS C1 controls direction of data transfers, i.e., gate data to the bus (DATI, DATIP) or gate data from the bus (DATO, DATOB). The fourth input line (pin 12) is an address enable signal that must always be true in order for the decoder to operate. This address enable signal is derived from a series of gates that are true when MSYN is present and when the address line conditions indicate that one of the four valid addresses is present on the bus, and when the Unibus cycle is not a DATOB to the odd byte (i.e., A00=1, C1=1, and C0=1).

Table 5-3 lists the input conditions required to select an appropriate output signal. Note that only one of these output signals can be present at any given time.

5.2.1 Inputs

A simplified block diagram of the address selection logic is shown in Figure 5-1. Note that IN and OUT are always used with respect to the master (controlling) device. Thus, when the DL11 interface is used, an OUT transfer is a transfer of data out of the master (the processor) and into the interface. Similarly, an IN transfer is the operation of the interface furnishing data to the processor.

The address selection logic input signals consist of 18 address lines, A ⟨17:00⟩; 2 bus control lines, C ⟨1:0⟩; and a master synchronization (MSYN) line. The address selection logic decodes the incoming address as described below. This address format is shown in Figure 5-2. Note that all input gates are standard bus receivers.

a. Lines A01 and A02 are decoded to select one of the four addressable device registers.

b. Line C1 is decoded to select either an input (DATI) or output (DATO) function. When line C1 is false, an input (read) operation is selected; when it is true, an output (write or load) operation is selected.

c. Decoding of lines A ⟨10:03⟩ is determined by jumpers. When a given line contains a jumper, the address logic searches for a 0 on that line; if there is no jumper, the logic searches for a 1.

NOTE
Connection of jumpers on the M7800 module is identical to the method used on other devices which employ an M105 Address Selector Module.

d. Address lines A ⟨17:11⟩ must be all 1s. This specifies an address within the top 8K byte address bounds for device registers.

e. Line A00 is used for byte control in such a manner that no control signals are generated when a byte operation is performed on the high-order byte of any register.

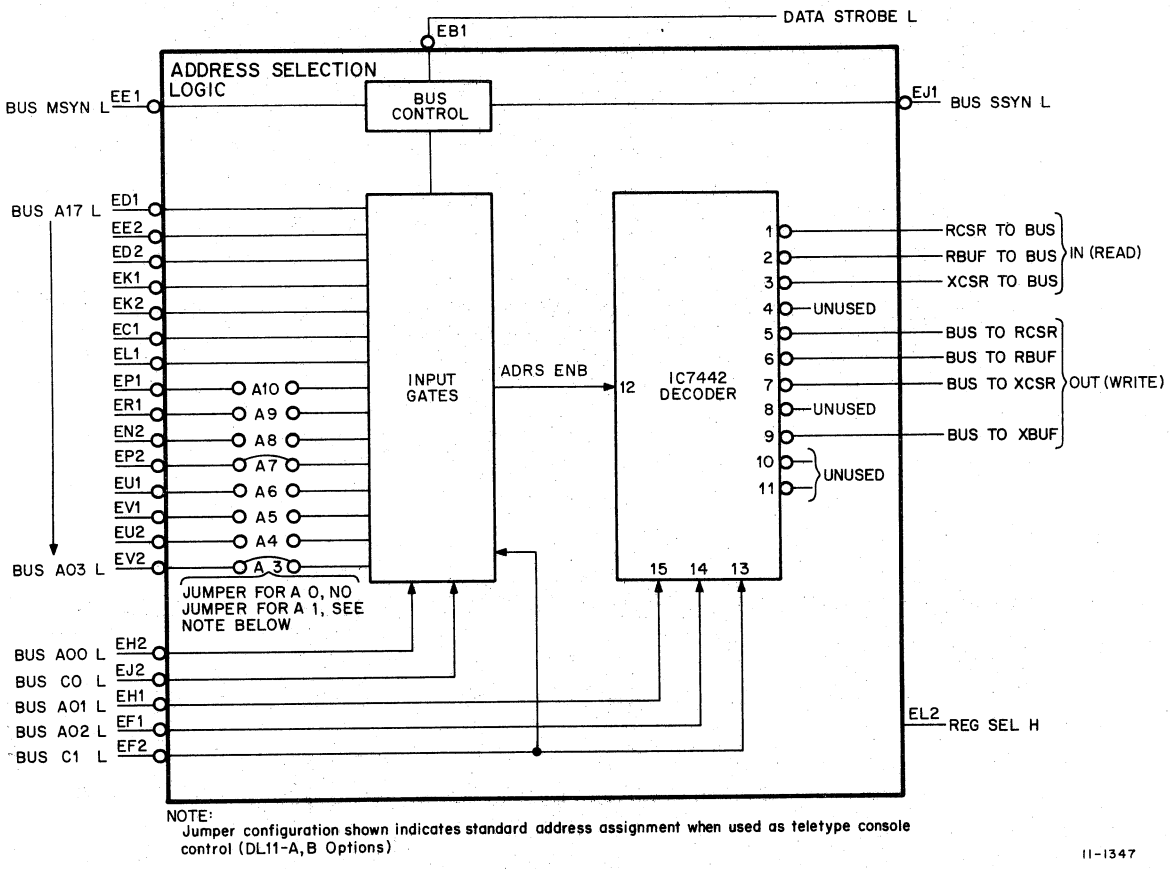

Figure 5-1 Address Selection Logic – Simplified Diagram

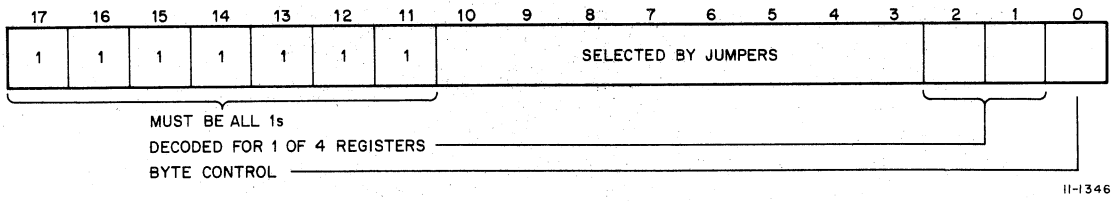

Figure 5-2 Interface Select Address Format

5.2.2 Outputs

The address selection logic output signals that are used permit selection of four 16-bit registers and determine whether information is to be gated into or out of the master device. All of these output signals are listed in Table 5-3.

The first three output signals listed in the table are used for reading (gating data into the master) three of the registers (RCSR, RBUF, and XCSR). There is no signal generated for the fourth register (XBUF) because it is a write-only register.

Three of the remaining four signals are used for writing (gating data from the master) into three of the registers (RCSR, XCSR, and XBUF). Although the fourth register (RBUF) is a read-only register which cannot be loaded, a signal is still produced. However, this signal is not used as a true loading signal but, rather, is used to produce SEL 2 L which is necessary for compatability with the KL11.

The address selection logic also produces three other outputs: BUS SSYN L, DATA STROBE L, and SEL 2 L.

The BUS SSYN L signal is derived from MSYN and the address line inputs and is the acknowledgement signal that is returned to the master device approximately 400 ns after MSYN becomes true.

Table 5-3
Register Selection Signals

Decoder Pins				Function Selected	Reg.	Bus Cycle
Pin 15 (A01)	Pin 14 (A02)	Pin 13 (C1)	Output Pin			
0	0	0	1	Receiver status to bus	RCSR	DATI or DATIP
1	0	0	2	Receiver buffer to bus	RBUF	DATI or DATIP
0	1	0	3	Transmitter status to bus	XCSR	DATI or DATIP
1	1	0	4	Not used	–	–
0	0	1	5	Bus to receiver status	RCSR	DATO or DATOB*
1	0	1	6	Bus to receiver buffer	RBUF	DATO or DATOB*
0	1	1	7	Bus to transmitter status	XCSR	DATO or DATOB*
1	1	1	9	Bus to transmitter buffer	XBUF	DATO or DATOB*

*DATOB to low byte only (A00 = 0)

NOTES:

1. There is no selection signal for transmitter buffer to bus because the transmitter buffer (XBUF) is a write-only register.
2. The bus to receiver buffer signal is used to produce a SEL 2 signal for KL11 Teletype control compatability. This signal is *not* used to load the buffer because the RBUF is a read-only buffer.
3. Input pin 12 is not shown since it must be true in all cases (address enable level).
4. Only seven of the possible ten outputs are used in the DL11. Output pins 4, 10, and 11 are unused.

When the transmitter buffer (XBUF) is addressed for loading, the address selection logic produces the BUS TO XBUF output signal. This signal triggers a monostable multivibrator that generates the DATA STROBE L pulse. This pulse strobes data from the bus lines into the UART and is of sufficient duration to allow data to be strobed into the UART. The DATA STROBE L pulse also inhibits the assertion of BUS SSYN L which ensures that the D lines remain stable during strobing. Operation of the UART is described in Paragraph 5.7.

The purpose of SEL 2 L is to reset the Teletype DONE flag. When the receiver buffer (RBUF) has been addressed for reading or writing, a signal triggers a monostable multivibrator that generates SEL 2 L. The SEL 2 L signal becomes RESET DATA AVAILABLE L which is applied to the UART. The function of this signal is to reset the DATA AVAILABLE line which indicates that an entire character has been received (DONE flag function).

5.3 INTERRUPT CONTROL

The interrupt control logic (Drawing DL-6) permits the DL11 interface to gain control of the bus (become bus master) and perform an interrupt operation. Jumpers on the logic can be altered so that the logic has a normal vector address within the range of 000 to 776. However, the specific vector used with a particular DL11 is dependent on the DL11 option and its use within a system.

The standard vector address assignments for all DL11 options are listed in Table 5-4. Note that most of the vectors are "floating" and therefore, are assigned according to the addressing scheme given in Appendix B. For the purpose of clarity, the following discussion assumes that a DL11-A is being used as a Teletype (console) control.

Table 5-4
DL11 Vectors and Priority Levels

DL11 Option	Vector Address	Priority Level
DL11-A or B (when used as a console)	060 064	BR4
DL11-A or B (additional units)	Floating*	BR4
DL11-C, D, or E	Floating*	BR4

*A floating vector address means that the initial vector is assigned according to a scheme that considers other PDP-11 devices in a particular system. This addressing scheme is given in Appendix B.

The interrupt control logic consists of a dual-input request and grant acknowledge circuit for establishing bus control. One input (referred to as the A input) is connected to the receiver section and provides a vector address of 060. The other input (referred to as the B input) is connected to the transmitter section and provides a vector address of 064. The two circuits operate independently; however, if simultaneous interrupt requests occur, the receiver section has priority over the transmitter section.

NOTE

The final octal digit of the vector address is *not* affected by the jumpers; therefore, regardless of the vector address selected by the jumpers, the final octal digit is always 0 for the receiver and 4 for the transmitter.

Figure 5-3 is a simplified diagram of the interrupt control logic. It is important to note that the DL11-E option has the capability of handling multiple source interrupts in the receiver (A input) portion of the logic. In addition, the dataset interrupt (DATASET INT) signal can be set by any one of several conditions such as RING, CARRIER, etc. In order to cover all interrupt logic, the remainder of this discussion assumes that a DL11-E option is being used.

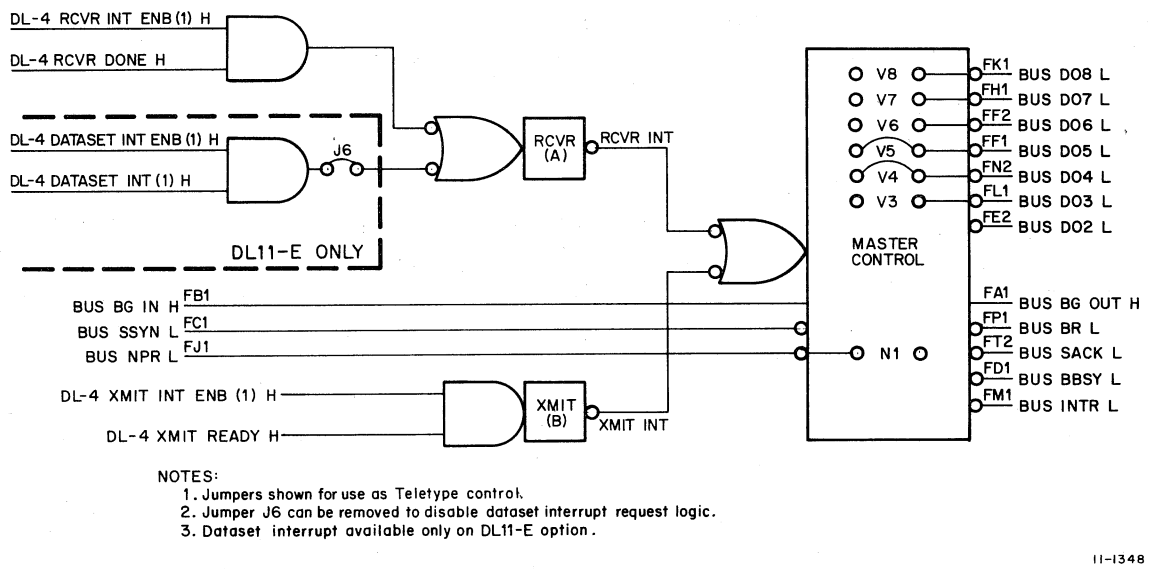

Figure 5-3 Interrupt Control Logic – Simplified Diagram

As shown in Figure 5-3, a receiver (or A input) interrupt request can be generated by the receiver (DL11-A, B, C, or D options) or can be generated by either the receiver or the dataset (DL11-E option). In either case, a RCVR INT signal is generated and sent to the master control logic which initiates the interrupt sequence. Jumper J6 on the DL11-E option can be removed if the user desires to disable the dataset interrupt logic.

The receiver interrupt logic is shown on drawing DL-4. When the receiver is issuing an interrupt request, two input signals must be high: RCVR INT ENB (1) and RCVR DONE. When a 1 is loaded into bit 06 of the receiver status register (RCSR), it sets the RCVR INT ENB flip-flop to produce RCVR INT ENB (1). This signal is applied to one leg of a 2-input AND gate as an enabling level. The second input to the gate is RCVR DONE which comes from the R DONE output line of the UART. When true, this line indicates that an entire character has been received, transferred to a holding register, and is ready for transfer to the bus. With the RCVR INT ENB (1) and RCVR DONE signals both true, the AND gate is qualified and RCVR INT is produced to initiate the interrupt sequence. A detailed explanation of UART operation is given in Paragraph 5.7.

When the dataset is issuing an interrupt (DL11-E option only), two different input signals must be high: DATASET INT ENB (1) and DATASET INT (1). When a 1 is loaded into bit 05 of the receiver status register (RCSR), it sets the DATASET INT ENB flip-flop to produce DATASET INT ENB (1). This signal is applied to one leg of a 2-input AND gate as an enabling level. The second input to the gate is DATASET INT (1). The logic that generates this signal is shown on Drawing DL-7 and described in Paragraph 5.4.1.5. Basically, the signal is

generated by a flip-flop that is direct set when any one of the following dataset signals is asserted: RING, CARRIER, CLR TO SEND, or SEC REC DATA. When this flip-flop sets, DATASET INT (1) is produced, the AND gate is qualified, and RCVR INT is generated as before to initiate an interrupt sequence.

The receiver (or A input) section of the interrupt control logic is used to gain control of the bus. When RCVR INT H is asserted, a bus request is made on the BR level corresponding to the level of the priority plug in the logic. The standard level for all DL11 options is BR4. This level may be changed on the priority plug, if desired. When the priority arbitration logic in the processor recognizes the request and issues a bus grant signal, the interrupt control circuit acknowledges with a SACK signal. When the DL11 interface has fulfilled all requirements to become bus master (BBSY false, SSYN false, and BG false), the interrupt control logic asserts BBSY.

The transmitter (or B input) section of the interrupt control logic operates in a similar manner to that of the receiver section (or A input). In this case, the two input signals that must be high are: XMIT INT ENB (1) and XMIT READY. When a 1 is loaded into bit 06 of the transmitter status register (XCSR), it sets the XMIT INT ENB flip-flop to produce XMIT INT ENB (1). This signal is applied to one leg of a 2-input AND gate as an enabling level. The second input to the gate is XMIT READY which comes from the XRDY (transmitter ready) output line of the UART. When true, this line indicates that another character may be loaded into the UART holding register. With the XMIT INT ENB (1) and XMIT READY signals both true, the AND gate is qualified and XMIT INT is produced to initiate an interrupt sequence. A detailed explanation of UART operation is given in Paragraph 5.7.

The transmitter control interrupt logic functions in an identical manner to the receiver control interrupt logic except that it generates a different vector address. Although both the receiver and the transmitter are at the same BR level (for example, both at BR4), the receiver has a slightly higher priority.

Once the DL11 interface has gained control by means of a BR request, an interrupt is generated. The interrupt vector address is selected by jumpers on the logic as shown in Figure 5-3. Because the vector is a 2-word (4-byte) block, it is not necessary to assert the states of bits 00 and 01.

The six selectable (jumpered) lines determine the two most significant octal digits of the vector address. The least significant octal digit is controlled by bit 02 so that all vector addresses end in either 0 or 4. The input to bit 02 is tied to the V2 flip-flop logic. Whenever an interrupt occurs in the receiver section, bus line D02 is *not* asserted, and the interrupt causes a vector at location 060 (or XX0 where XX refers to the digits selected by the jumpers). When an interrupt occurs in the transmitter control, bus line D02 is asserted, and the interrupt causes a vector at location 064 (or XX4). Note that the first two digits can be changed by the jumpers but the last digit is always either 0 or 4.

The BG IN signal is allowed to pass through the logic to BUS BG OUT when the interface is not issuing a request. To request bus use, the AND condition of interrupt enable and interrupt must be satisfied (i.e., RCVR INT ENB and RCVR DONE, or DATASET INT ENB and DATASET INT, or XMIT INT ENB and XMIT READY). Both levels must remain true until the interrupt service routine clears one of them. Once bus control has been attained, it is released when the processor has strobed in the interrupt vector. After releasing bus control, the logic inhibits further bus requests even if the interrupt and interrupt enable levels remain asserted. In order to make another bus request, one of the two levels must be dropped and then reasserted to cause the logic to reassert the request line. This prevents multiple interrupts when the control logic is used to generate interrupts.

In the case of the DL11-E option, the receiver section handles a multiple source interrupt (RCVR DONE and DATASET INT). In addition, DATASET INT can be caused by one of many conditions (RING, CARRIER, etc.). If the program is servicing an interrupt for one condition and a second interrupt condition develops, it is possible that this second, and subsequent, interrupt may not occur. In order to prevent this, all possible interrupt conditions should be checked after servicing a specific condition. An alternative solution is to clear both interrupt enable bits (05 and 06) upon entry to the service routine for vector XX0 and reset the bits at the end of the service routine.

Note that the interrupt control logic used in the DL11 interface is not capable of issuing NPR requests.

In order to improve NPR latency, the NPR line is sampled and prevents an interrupt request until all NPRs have been honored. The sampling of the NPR line is controlled by a jumper (N1) on the DL11 interface module.

CAUTION

Only certain PDP-11 processors can work with the special circuit described above. The jumper (N1) on the module, when cut, prevents this special circuit from working. This circuit *does not* work on PDP-11/20 and PDP-11/15 systems unless the KH11 has been included.

5.4 REGISTERS

All software control of the DL11 Asynchronous Line Interface is performed by four device registers. These registers are assigned Unibus addresses and can be read or loaded with any PDP-11 instruction that refers to their address (with certain exceptions such as load-only, read-only, or unused bits). Table 5-5 lists these registers and the function of each. Subsequent paragraphs discuss each of the registers from a hardware standpoint. A discussion of the registers from a programming standpoint is presented in Chapter 4.

NOTE

Although the basic function of each register is identical for all DL11 options, certain bit positions and functions may not be used from option to option. Therefore, the following paragraphs cover all possible bit positions and indicate which options they pertain to.

5.4.1 Receiver Status Register (RCSR)

The receiver status register (RCSR) is used to monitor the status of receiver logic operation when the DL11 accepts a character and is used to initiate interrupt sequences.

The receiver status registers in the DL11-A and C options include a reader enable (RDR ENB) bit that is used to advance the paper-tape reader in an ASR Teletype Unit.

The receiver status register in the DL11-E option includes nine additional bits for use with datasets.

Each of the bits (for all options) is discussed separately in the following paragraphs, beginning with the most significant bit. Any bit that is not applicable to all DL11 options is so specified.

Table 5-5
Device Register Functions

Register	Mnemonic	Function
Receiver Status Register	RCSR	Provides detailed information on the status of the DL11 receiver logic. Status information includes such flags as receiver active (RCVR ACT) and receiver done (RCVR DONE). Also includes the interrupt enable bit that can be used to initiate interrupt sequences when RCVR DONE sets. The DL11-E status register contains additional status and interrupt enable bits for use with datasets. Status bits include such information as carrier detection, ring, secondary transmitter, and clear to send.
Receiver Buffer Register	RBUF	Holds the character received from the external device prior to transfer to the Unibus. The format of the character is dependent on the specific DL11 option used. The receiver buffer in the DL11-C, D, and E options also includes four error bits that are set if a corresponding error condition arises during reading of a character from the device.
Transmitter Status Register	XCSR	Provides the interrupt enable bit and the transmitter ready (XMIT RDY) flag so that transmitter logic can be monitored and an interrupt sequence initiated, if desired. Provides the maintenance bit which can be set under program control to use the maintenance mode of operation. The DL11-C, D, and E options also include a BREAK bit for continuous generation of a space.
Transmitter Buffer Register	XBUF	Holds the character to be transferred to the external device. Format of this data is dependent on the specific DL11 option used.

5.4.1.1 **Dataset Interrupt Bit (15)** – The dataset interrupt (DATASET INT) bit, available only on the DL11-E option, indicates that a dataset signal has made a transition. An interrupt sequence is initiated provided the DATASET INT ENB bit (bit 05) is also set. The DATASET INT bit is controlled by a flip-flop that is set whenever RING, CARRIER, CLEAR TO SEND, or SEC REC DATA signals from the dataset change states.

The DATASET INT flip-flop (Drawing DL-7) is direct set by the output of one of four series of gates; each series of gates is tied to one of four signals from the dataset. The first series of gates is qualifeid by a RING signal from the dataset. Note that the initial gate has a differentiating circuit connected in such a way that the gate is qualified only when the RING signal changes from 0 to 1. The remaining three series of gates function similarly

except that a delay circuit is connected in such a way that the input gate is qualified on either a 0 to 1 or 1 to 0 transition of the input signal. The three dataset signals to these three series of gates are: CARRIER, CLEAR TO SEND, and SEC REC DATA.

When the DATASET INT flip-flop is set, it produces a DATASET INT H signal which is applied to the interrupt control logic (Paragraph 5.3). The signal is also applied to a bus driver for BUS D15 L (Drawing DL-2) so that the status of the bit can be read by the program.

The DATASET INT flip-flop is cleared whenever the receiver status register is read because of the RCSR TO BUS signal at the clock input. Because the flip-flop is cleared when it is read, bit 15 is, in effect, a read-once bit. The flip-flop may also be cleared by an initialize (BINIT) signal.

5.4.1.2 Dataset Status Bits (14, 13, 12, and 10) – These four bits are available only on the DL11-E option and indicate the status of the dataset. All four bits (RING, CLEAR TO SEND, CARRIER, and SEC REC DATA) operate in a similar manner and when set, set the DATASET INT bit as described in Paragraph 5.4.1.1.

The RING bit indicates that a ringing signal is being received from the dataset. The RING signal from the dataset qualifies a series of gates (Drawing DL-7) whenever it changes from 0 to 1. The output of the gates direct sets the DATASET INT flip-flop and is also applied to a bus driver for BUS D14 L (Drawing DL-2) so that the status of the bit can be monitored by the program.

The remaining three dataset signals operate similarly except that the related gates are qualified when the signal from the dataset changes from 0 to 1 or from 1 to 0. Qualifying the gates sets the DATASET INT flip-flop and applies the appropriate signal to a related bus driver for reading by the program.

The CLR TO SEND bit (bit 13) is activated by the CLEAR TO SEND signal from the dataset. When the related gates are qualified, the bit is set to indicate an ON condition; when not qualified, the bit is clear to indicate an OFF condition.

The CAR DET bit (bit 12) is activated by the CARRIER signal from the dataset and the related gates are qualified (bit set) when the data carrier is received. When the gates are not qualified (bit clear), it indicates that the dataset has either completed the current transmission or that an error condition exists in the dataset.

The SEC REC bit (bit 10) is activated by the SEC REC DATA signal from the dataset to provide a receive capability for the reverse channel of a remote station. When the related gates are qualified (bit set), it indicates a space (+6V).

5.4.1.3 Receiver Done (07) – The receiver done (RCVR DONE) flag, which is available on all options, indicates that a full character has been received. This bit, when set, clears the receiver active (RCVR ACT) flag and initiates an interrupt sequence provided the associated interrupt enable bit (RCVR INT ENB bit 06) is also set.

Once an entire character has been received and is stored in the UART holding register, the UART issues a received data available (R DONE) signal (Drawing DL-4) which is inverted and fed to the direct clear input of the RCVR ACT flip-flop to clear it, thereby indicating that the receiver is no longer in use and is capable of receiving a new character.

The output of the inverter passes through another inverter to become RCVR DONE H. This signal is ANDed with RCVR INT ENB (1) H, which is true if bit 06 is set, to produce the RCVR INT H signal that initiates an interrupt sequence as described in Paragraph 5.3. The RCVR DONE H signal is also ANDed with RCSR TO BUS H (Drawing DL-2) so that the status of the RCVR DONE bit can be read by the program from bus data line BUS D07.

The RCVR DONE flag can be cleared by INIT or by the occurrence of RESET DATA AVAILABLE L. This signal occurs under one of two conditions. Whenever the reader buffer (RBUF) is addressed, indicating that a new character is to be loaded into the receiver, SEL 2 L is true and passes through an OR gate to produce RESET DATA AVAILABLE L. This signal is applied to the CLR R DONE line of the UART, causing the R DONE line to reset, thereby resetting RCVR DONE.

If the reader enable (RDR ENB) flip-flop is set, indicating that the tape reader in a Teletype unit is being advanced, then the 0 side is low and passes through the same OR gate as before to reset RCVR DONE.

5.4.1.4 Receiver Interrupt Enable (06) – The receiver interrupt enable bit (RCVR INT ENB) permits an interrupt sequence to be initiated, when the RCVR DONE bit sets, to indicate that a character has been received and is ready for transfer to the Unibus. This bit is set by using the BUS TO RCSR H signal as a load pulse to load a 1 from bus line BD06 H into the RCVR INT ENB flip-flop (Drawing DL-4). Note that this flip-flop is shown on the drawing as a 74175 IC chip. This chip is basically four D-type flip-flops with common clock and clear inputs. A schematic of this IC is shown in Appendix A.

The output of the flip-flop, RCVR INT ENB (1) H, is applied to one leg of a 2-input AND gate. The other input to this AND gate is the RCVR DONE H signal which is produced when the receiver has stored a full character of data. When both inputs to the AND gate are true, the RCVR INT H signal is produced and is applied to the interrupt control logic (Paragraph 5.3) to initiate the interrupt sequence.

The RCVR INT ENB (1) H signal is also ANDed with RCSR TO BUS H so that the program can read the status of this bit position from bus data line BUS D06.

The RCVR INT ENB flip-flop is cleared by BINIT L.

5.4.1.5 Dataset Interrupt Enable (05) – The dataset interrupt enable bit (DATASET INT ENB), which is only available on the DL11-E option, permits an interrupt sequence to be initiated when the DATASET INT bit sets to indicate that the dataset is interrupting the program. This bit is set by using the BUS TO RCSR H signal as a load pulse to load a 1 from bus line BUS D05 H into the DATASET INT flip-flop (Drawing DL-4). This flip-flop is part of a 74175 IC chip. The chip contains four D-type flip-flops with common clock and clear inputs. A schematic of this IC is shown in Appendix A.

The DATASET INT ENB (1) H output of the flip-flop is applied to one leg of a 2-input AND gate. The other input to this gate is the DATASET INT H signal which is produced when the dataset attempts to interrupt the program. When both inputs to the gate are true, the RCVR INT H signal is produced and is applied to the interrupt control logic (Paragraph 5.3) to initiate the interrupt request. Generation of DATASET INT is described in Paragraph 5.4.1.1.

The DATASET INT ENB (1) H signal is also ANDed with RCSR TO BUS H (Drawing DL-2) so that the program can read the status of this bit position from bus data line BUS D05.

The DATASET INT ENB flip-flop is cleared by BINIT L.

5.4.1.6 Secondary Transmit (03) – The secondary transmit (SEC XMIT) bit, which is also referred to as supervisory transmitted data, provides a transmit capability for a reverse channel of a remote station and is available only on the DL11-E option.

The SEC XMIT bit is set by using the BUS TO RCSR H signal as a load pulse to load a 1 from bus line BD03 H into the SEC XMIT flip-flop (Drawing DL-4). Note that this flip-flop is part of a 74175 IC chip which contains four D-type flip-flops with common clock and clear inputs. A schematic of this IC is shown in Appendix A.

The SEC XMIT (1) output of the flip-flop is applied to an EIA driver (Drawing DL-7) which provides the +6V level required by the dataset. This 6V level is connected to pin FF of the Berg connector (EIA SEC TRANSMIT DATA).

The SEC XMIT (1) output of the flip-flop is also ANDed with RCSR TO BUS H (Drawing DL-2) so that the program can read the status of this bit position from bus data line BUS D03.

The SEC XMIT flip-flop is cleared by BINIT L.

5.4.1.7 Request To Send (02) – The request to send (REQ TO SEND) bit is a control bit for the dataset and is required for transmission. This bit is only available on the DL11-E option.

The REQ TO SEND bit is set by using the BUS TO RCSR H signal as a load pulse to load a 1 from bus line BD02 H into the REQ TO SEND flip-flop (Drawing DL-4). Note that this flip-flop is part of a 74175 IC chip which contains four D-type flip-flops with common clock and clear inputs. A schematic of this IC is shown in Appendix A.

The REQ TO SEND (1) output of the flip-flop is applied to an EIA driver (Drawing DL-7) which provides the +6V and -6V levels required by the dataset. The 6V output of the EIA driver is connected either to pin V of the Berg connector (EIA REQ TO SEND) or to pin C (EIA FORCE BUSY) depending on whether jumper J1 or J2 is installed in the module. Normally, jumper J1 is connected to provide an EIA REQ TO SEND level. However, on certain modems, an EIA FORCE BUSY signal is sometimes required. In this case, jumper J2 is installed. Note that either J1 or J2 is present, but never both.

The REQ TO SEND (1) output of the flip-flop is also ANDed with RCSR TO BUS H (Drawing DL-2) so that the program can read the status of this bit position from bus data line BUS D02.

The REQ TO SEND flip-flop is cleared by BINIT L.

5.4.1.8 Data Terminal Ready (01) – The data terminal ready (DTR) bit is a control bit for the dataset and permits the interface to be connected to (bit set) or disconnected from (bit clear) the dataset communication channel. This bit is only available on the DL11-E option.

The DTR bit is set or cleared by using the BUS TO RCSR H signal as a load pulse to load either a 1 or 0 from bus line BUS D01 into the DTR flip-flop (Drawing DL-4). If a 0 is loaded, the flip-flop is cleared, and the interface is disconnected from the dataset communication channel.

If a 1 is loaded into the flip-flop, the flip-flop is set and produces DATA TERMINAL READY (1) which is applied to an EIA driver (Drawing DL-7) that provides the +6V level required by the dataset. This level (EIA DATA TERMINAL READY) is fed through Berg connector pin DD to the dataset, thereby establishing a data communication channel between the dataset and the DL11 interface.

The DATA TERMINAL READY (1) output of the flip-flop is also ANDed with RCSR TO BUS H (Drawing DL-2) so that the program can read the status of this bit position from bus data line BUS D01.

NOTE

The BINIT L signal has no effect on the DTR flip-flop. This flip-flop can only be cleared by the program by loading a 0 into bit position 01. Therefore, the DTR flip-flop is *not* cleared when the START key is depressed, a RESET instruction is issued, or a power-up condition occurs.

5.4.1.9 Reader Enable (00) – The reader enable (RDR ENB) bit, when set, advances the paper-tape reader in ASR Teletype units and is available on all options; however, only the DL11-A and DL11-C options connect to the 20 mA output circuit. The BD00 H signal, which is derived from receiving BUS D00 L, is applied to the data input of the RDR ENB flip-flop (Drawing DL-4); the clock input receives the loading signal, BUS TO RCSR H. When the flip-flop is set, the RDR ENB (1) H output is applied to pin PP of the Berg connector (Drawing DL-3) for application to the Teletype unit. The 0 side of the flip-flop, which is now low, is gated through an OR gate (Drawing DL-4) to produce RESET DATA AVAILABLE L which resets the RCVR DONE flag as described in Paragraph 5.4.1.3.

The RDR ENB bit is a write-only bit; it cannot be read by the program.

Whenever the Teletype starts sending data to the interface, the RDR ENB bit is cleared so that the Teletype reader does not advance another frame while it is transmitting information to the DL11.

The serial input data (SI H) from the Teletype is fed to a 4-bit shift register (IC 8271) as shown on Drawing DL-4. The four output lines of this shift register (which is referred to as the "START bit detector") are connected to a series of gates that are qualified when the START bit enters the register. Actually, the lines are not qualified until the middle of the START bit enters the register. This ensures sufficient time to guarantee a valid START bit. When qualified, the gates produce RESET RDR ENB L which direct clears the RDR ENB flip-flop.

The RESET RDR ENB L signal is also applied through an inverter to the RCVR ACT flip-flop, thereby setting it to indicate that the interface is now receiving data and the receiver logic circuits are in use.

The RDR ENB flip-flop can also be cleared by BINIT L.

5.4.2 Receiver Buffer Register (RBUF)

The receiver buffer (RBUF) is an 8-bit read-only register in the UART. Serial information is converted to parallel data by the UART and then gated to the Unibus. The RBUF consists of gating logic rather than a flip-flop register; therefore, the data output lines from the UART must be held until read onto the bus. Because the UART is double-buffered, data on these output lines is valid until the next character is received and assembled. The RBUF register is read by a DATI sequence and the data is transmitted to the Unibus for transfer to the processor, memory, or some other PDP-11 device.

The low-order byte portion of the register is identical for all DL11 options and is only used for holding data. If, however, a variable data format is used, the buffer is justified into the least significant bit positions. This justification is performed by the UART. The data loaded into the buffer is coded so that binary 0s correspond to spaces and binary 1s correspond to marks (or holes).

The four most significant bits in the high-order byte portion of the register are used for error indications on the DL11-C, D, and E options only.

The four error bits and the data portion of the receiver buffer register are covered separately in the following paragraphs.

5.4.2.1 Receiver Error Bits – The high-order byte of the receiver buffer register (RBUF) contains four error bits that set to indicate improper receiver operation. These bits are available only on the DL11-C, D, and E options.

Three of the four error bits are generated by the UART as follows:

a. OR ERROR (overrun error, bit 14) – Indicates that R DONE was not reset (previously received character was not read) prior to receiving a new character. When this condition exists, the UART generates an OR ERR H signal.

b. FR ERR (framing error, bit 13) – Indicates that a framing error is present because the character read had no valid STOP bit. When this condition exists, the UART generates an FR ERR H signal.

c. P ERR (parity error, bit 12) – Indicates that the parity received does not agree with the expected parity. If parity has been selected and this condition exists, the UART generates a P ERR H signal.

Bit 15, which is the error (ERROR) bit, is the inclusive-OR of the OR ERR, FR ERR, and P ERR bits. Whenever one of these errors occurs, the appropriate signal from the UART (OR ERR H, FR ERR H, or P ERR H) passes through an inverter and qualifies an OR gate (Drawing DL-2). The output of the OR gate is ERROR H. Each of the four error signals (ERROR H, OR ERR H, FR ERR H, and P ERR H) qualifies one leg of an associated 2-input AND gate. The other leg is qualified by RBUF TO BUS L which is true when the receiver buffer is addressed for reading. The output of each AND gate is tied to an associated bus data line (BUS D15, BUS D14, BUS D13, and BUS D12) so that the status of each error bit can be monitored by the program.

It should be noted that none of the error bits is tied to the interrupt logic. Therefore, occurrence of a receiver error does not cause the program to be interrupted for a branch to a handling routine. However, these flags are updated each time a character is received, at which point an interrupt may occur by means of R DONE.

The initialize signal (BINIT) may have an effect on these bit positions depending on the UART used. A bit is cleared by clearing the error-producing condition. When the next character is received by the UART, the error bits are updated and the new status is available when the receiver buffer register is read.

5.4.2.2 Receiver Data Bits – The receiver buffer register is not a flip-flop register but consists simply of gates that strobe data from the output lines of the UART to the Unibus. The UART receives the incoming serial data from the external device, converts it to parallel data, and places it on eight parallel output lines. Each of these lines (RD0 through RD7) is fed to one leg of an AND gate as shown on Drawing DL-2. When the receiver buffer is addressed for reading (RBUF TO BUS H is true), the levels on these lines are gated through to bus data lines BUS D00 through BUS D07.

Figure 5-4 is a simplified diagram of both receiver and transmitter gating logic showing a single bit position. When the receiver gating is used, the output of the UART is gated through to the Unibus. When the transmitter is used, data from the Unibus is gated through to the transmitter inputs of the UART.

The receiver buffer can only be read by the program, it is loaded by the UART. Note that the initialize signal (BINIT) has no effect on this register.

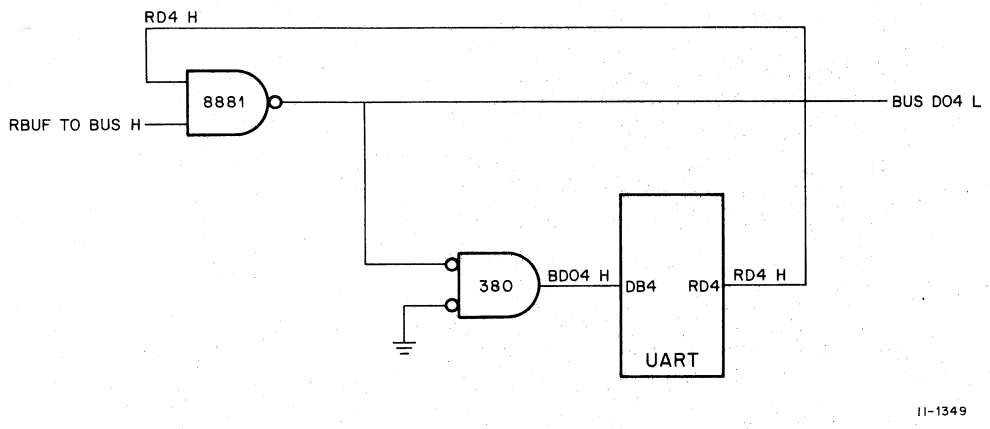

Figure 5-4 RBUF and XBUF Gating Logic – Simplified Diagram (one bit position)

5.4.3 Transmitter Status Register (XCSR)

The transmitter status register (XCSR) consists of control and status monitoring bits for the transmitter portion of the DL11 interface.

All DL11 options contain two bits associated with transmitter operation: a transmitter ready flag to indicate that the transmitter buffer can be loaded, and an interrupt enable to allow the transmitter to initiate an interrupt sequence. Both of these bits are described in subsequent paragraphs.

A maintenance (MAINT) bit is also included in all options so that a closed loop test of DL11 interface operation can be performed. The maintenance function is covered in detail in Paragraph 5.9.

A BREAK bit (bit 00) is available only on the DL11-C, D, and E options and permits transmission of a continuous space to the external device. This logic is described in Paragraph 5.10.

5.4.3.1 Transmitter Ready (07) – The transmitter ready (XMIT RDY) flag, which is available on all DL11 options, indicates that the transmitter buffer (XBUF) is ready to accept another character from the Unibus for transfer to the external device. This bit, when set, initiates an interrupt sequence, provided the associated interrupt enable bit (XMIT INT ENB bit 06) is also set.

This bit is controlled by the XRDY output of the UART which indicates that the transmitter buffer is empty. It is set by the initialize signal (BINIT) to indicate that the data bits' holding register within the UART may be loaded with another character. It is also set whenever the holding register is empty. Once loading of the transmitter buffer begins, this bit is cleared. The XRDY output of the UART is gated to produce the XMIT READY H flag.

As shown on Drawing DL-4, the XMIT READY H signal is ANDed with XMIT INT ENB (1) H, which is true if bit 06 is set, to produce the XMIT INT H signal that initiates an interrupt sequence as described in Paragraph 5.3. The interrupt sequence allows the program to branch to a handling routine for loading a character for transmission to the external device.

The XMIT READY H signal is also ANDed with XCSR TO BUS H (Drawing DL-2) so that the status of the XMIT READY flag can be read by the program from bus data line BUS D07.

5.4.3.2 Transmitter Interrupt Enable (06) – The transmitter interrupt enable bit (XMIT INT ENB) permits an interrupt sequence to be initiated when the XMIT RDY bit sets to indicate that the transmitter buffer can accept another character from the Unibus. This bit is set by using the BUS TO XCSR H signal as a load pulse to load a 1 from bus line BD06 H into the XMIT INT ENB flip-flop (Drawing DL-4). Note that this flip-flop is shown on the drawing as part of a 74175 IC chip. This chip is basically four D-type flip-flops with common clock and clear inputs. A schematic of this IC is shown in Appendix A.

The output of the flip-flop, XMIT INT ENB (1) H, is applied to one leg of a 2-input AND gate. The other input to this AND gate is the XMIT READY H signal which is produced when the transmitter buffer is clear and capable of receiving a character from the bus. When both inputs to the gate are true, the XMIT INT H signal is produced and is applied to the interrupt control logic (Paragraph 5.3) to initiate the interrupt sequence.

As shown on Drawing DL-2, the XMIT INT ENB (1) H signal is also ANDed with XCSR TO BUS H so that the program can read the status of this bit position from bus data line BUS D06.

The XMIT INT ENB flip-flop is cleared by BINIT L.

5.4.4 Transmitter Buffer Register (XBUF)

The transmitter buffer (XBUF) is an 8-bit write-only register that receives the parallel character from the Unibus and loads it into the UART for serial conversion and transmission.

Although this buffer is identical for all DL11 options, some options may function with a variable code format of less than eight data bits. In these cases, the data character must be justified into the least significant bit positions by the program. Bit positions within the UART itself are enabled or disabled according to the format code employed by a specific option. Thus, for example, if a 5-bit code format is used, bit positions 5, 6, and 7 are disabled in the format. If the program does not justify the character and it is loaded into the most significant bit positions, data loaded into bits 5, 6, and 7 would be lost.

When the interface is initialized, the XMIT RDY flag is set to indicate that the XBUF can be loaded. When the buffer is loaded with the first character, the flag clears and then sets again within a fraction of a bit time. A second character can then be loaded because the UART transmitter section is double-buffered. When the second character is loaded, the flag clears again but this time remains clear for nearly a full character time.

The transmitter buffer (Drawing DL-2) is not a flip-flop register but consists simply of a series of gates that strobe data from the Unibus lines to the input lines of the UART. Transfer of data is accomplished by a DATO or DATOB bus cycle.

The character to be transmitted to the device is loaded onto bus data lines BUS D07 through BUS D00 and gated to the UART input lines as BD07 through BD00. Once on the input lines, the data is strobed into the UART by the DATA STROBE L signal which is derived from the BUS TO XBUF signal that occurs when the transmitter buffer is addressed for loading.

Figure 5-4 is a simplified diagram of both receiver and transmitter gating logic showing a single bit position.

Loading of the transmitter buffer is such that a logic 1 causes a mark (or hole) to be transmitted and a logic 0 causes a space.

The UART also generates two signals associated with transmitter buffer operation. An XRDY (indicating transmitter buffer is empty) signal is generated when the UART can be loaded with another character. This signal is the XMIT RDY flag described in Paragraph 5.4.3.1. The second signal is EOC (end of character) which goes high after a full character has been transmitted to the device. It is used to generate the number of STOP bits required by a specific option and is described more fully in Paragraph 5.8.

5.5 TRANSMITTER CONTROL LOGIC

The transmitter control logic provides the necessary input, control, and output logic for the UART when it is used to convert parallel data from the Unibus to the serial data required for output. This logic may be divided into three functional areas: control and input, format selection, and data output.

The control and input logic for the transmitter portion of the UART consists of both input and output control signals, a clock frequency, and an input data character. These signals are listed in Table 5-6 along with a reference to the paragraph containing a detailed description of the logic.

Table 5-6
Transmitter Control and Input Logic

Signal Mnemonic	Signal Name	Paragraph Number	Description
XRDY	Transmitter Ready (indicates buffer empty)	5.4.3.1	The XMIT RDY flag that indicates the buffer is empty and may be loaded with another character from the Unibus.
LD XD	Load Transmitter Data	5.4.4	The signal that strobes data from the buffer into the UART when the XBUF is addressed for loading.
EOC	End of Character	5.8	Signals that a character has been transmitted.
XCLK	Transmitter Clock Pulse	5.8	Provides the required transmitter clock rate. This rate is 16 times the selected baud rate.
XD0 – XD7	Data Buffer	5.4.4	Represents the character (five to eight data bits) loaded from the Unibus into the UART.

The format selection logic basically consists of jumpers that are arranged to select the number of data bits, STOP bits, and type of parity. Format selection is covered in Table 2-3 which also lists applicable DL11 options for each of the format selection functions.

The output logic of the transmitter is described in the following paragraphs.

Once the UART has converted the parallel character from the Unibus (UART operation is described in Paragraph 5.7), it shifts the character out, one bit at a time, onto the serial output (SO) line. The first bit shifted out is the START bit, followed by the DATA bits (LSB first), then the PARITY bit (if selected), and finally, the STOP bits. The output of the line passes through a flip-flop to become SERIAL OUT H. This flip-flop is used to compensate for the different number of STOP bits that can be selected.

When the DL11-A or C option is used, the SERIAL OUT H data line is connected to a circuit that converts the line to the bipolar levels required by the 20 mA current loop (Drawing DL-3). The resultant positive serial data is applied to pin AA of the Berg connector and the negative serial data is applied to pin KK.

The SERIAL OUT H data also passes through an inverter and is applied as a TTL level directly to pin SS of the Berg connector.

When the DL11-B, D, or E option is used, SERIAL OUT H passes through an EIA level converter (Drawing DL-7) to pin F of the Berg connector.

Regardless of the option used, the SERIAL OUT H is also applied to the MAINT multiplexer circuit for use during the maintenance mode as described in Paragraph 5.9.

5.6 RECEIVER CONTROL LOGIC

The receiver control logic provides the necessary input, output, and control logic for the UART when it is used to convert serial data to the parallel data required by the Unibus. This logic may be divided into three functional areas: status and control, format selection, and data input.

The status and control portion of the logic consists of both input control and output status signals, a clock frequency, and an output data character. These signals are listed in Table 5-7 along with a reference to the paragraph containing a detailed description of the logic.

The format selection logic is basically the same as used for the transmitter control and is described in Table 2-3.

The input logic of the transmitter is described in the following paragraphs.

Regardless of the device used, the serial input from the device is loaded into the DL11 one bit at a time beginning with the START bit, then the DATA bits (LSB first), the PARITY bit (if used), and the STOP bits.

When the DL11-A or C option is used, the bipolar levels of the serial data are applied to pins K (+) and S (-) of the M7800 Berg connector. The bipolar level is converted to a TTL level (Drawing DL-3) and fed to pin H which is connected to pin E when these options are used. The serial data is gated through an OR gate to a 2-line to 1-line multiplexer. When the interface is *not* in the maintenance mode, the multiplexer has no effect and the serial data (SI H FS1) is applied to the input (SI) of the UART as shown on Drawing DL-4. The SI H input is also fed to a shift register that has its output decoded to reset the RDR ENB flip-flop.

Table 5-7
Receiver Status and Control Logic

Signal Mnemonic	Signal Name	Paragraph Number	Description
R DONE	Reader Done	5.4.1.3	The R DONE flag that indicates a full character has been received from the device and is ready for transfer to the Unibus.
P ERR	Parity Error	5.4.2.1	A status signal indicating that the received character has a parity error. Can be read by the program.
FR ERR	Framing Error	5.4.2.1	A status signal indicating that the received character has no valid STOP code. Can be read by the program.
OR ERR	Overrun Error	5.4.2.1	A status signal indicating that the character was not read prior to receiving another character from the device. Can be read by the program.
R CLK	Receiver Clock Pulse	5.8	Provides the required receiver clock rate. This rate is 16 times the selected baud rate.
RD7 – RD0	Receiver Data Buffer	5.4.2	Represent the character (five to eight data bits) transferred from the UART to the Unibus after serial-to-parallel conversion.

When the DL11-C, D, or E option is used, the serial input, referred to as EIA RECEIVE DATA (Drawing DL-7), enters pin J and passes through an EIA level converter to pin M of the Berg connector. Because of the cabling, pin M is connected to pin E (TTL input) and the data follows the same path as before.

5.7 UNIVERSAL ASYNCHRONOUS RECEIVER/TRANSMITTER (UART)

The Universal Asynchronous Receiver/Transmitter (UART) is an LSI subsystem which accepts binary characters from either a terminal device or a computer and receives or transmits this character with appended control and error detecting bits. In order to make this subsystem universal, the baud rate, bits per word, parity mode, and number of stop bits are selected by external logic circuits.

The UART is a full duplex receiver/transmitter. The receiver section accepts asynchronous serial binary characters and converts them to a parallel format for transmission to the Unibus. The transmitter section accepts parallel binary characters from the bus and converts them to a serial asynchronous output with start and stop bits added.

All UART characters contain a START bit, five to eight DATA bits, one, one and a half, or two STOP bits, and a PARITY bit which may be odd, even, or turned off. The STOP bits are opposite in polarity to the START bit. This is the maximum format that can be used. Although the UART itself produces these bits, certain DL11 options do not use all of them. Therefore, the format of an input or output serial word may vary from option to option as shown in Figure 2-1.

Both the receiver and transmitter are double buffered. The UART internally synchronizes the START bit with the clock input to ensure a full 16-element (clock periods) START bit independent of the time of data loading. Transmitter distortion (assuming perfect clock input) is less than 3 percent on any bit up to 10 kilobaud. The receiver strobes the input bit within ±8 percent of the theoretical center of the bit. The receiver also rejects any START bit that lasts less than one-half of a bit time.

The UART input and output lines are shown on Drawing DL-4. A description of the receiver is given in Paragraph 5.7.1 and a description of the transmitter is given in Paragraph 5.7.2. Note that in the following discussions, the mnemonic and pin number of UART input and output lines are given in parentheses.

5.7.1 Receiver Operation

A block diagram of the UART receiver is shown in Figure 5-5. When the receiver is in the idle state, it samples the serial input line (SERIAL IN, pin 20) at the selected clock edges (R CLK, pin 17) after the first mark-to-space transition of the serial input line. If the first sample is a mark (high), the receiver returns to the idle state and is ready to detect another mark-to-space transition. If, however, the first sample is a space (low), then the receiver enters the data entry state.

If the receiver control logic has *not* been conditioned to the *no* parity state (a low on pin 35), then the receiver checks the parity of the data bits plus the parity bit following the data bits and compares it with the parity sense on the parity select line (pin 39). If the parity sense of the received character differs from the parity of the UART control logic, then the receive parity error line (P ERR, pin 13) goes high and causes the P ERR bit in the RBUF register to set.

If the receiver control logic *has* been conditioned to the *no* parity state (a high on pin 35), then the receiver takes no action with respect to parity and maintains the parity error line (P ERR, pin 13) in the false (low) state. When the control logic senses a parity error, it generates a P ERR signal. The DATA AVAILABLE signal updates the parity error indicator. Note that the P ERR output is always produced by the UART but is coupled to the RBUF only on DL11-C, D, and E options.

The receiver samples the first STOP bit which occurs either after the PARITY bit, or after the data bits if no parity is selected. If a valid (high) STOP bit exists, no further action is taken. If, however, the STOP bit is false (low), indicating an invalid STOP code, then the UART control logic provides a framing error indication (a high on FR ERR, pin 14). The status of the framing error bit can also be read from the RBUF on DL11-C, D, and E options.

Because the serial input from the external device is shifted into the UART a bit at a time (SI, pin 20), occurrence of a STOP code indicates that the entire data character has been received and shifted into the receiver shift register. After the STOP bit has been sampled, the receiver control logic parallel transfers the contents of the shift register into the receiver data holding register and then sets the data available (R DONE) flag.

The data available signal also functions as the clock input to the FRAME ERR, PARITY, and OVERRUN flip-flops in the UART status register. At this point, the DA flip-flop is set, the OVERRUN flip-flop is clear but has a high on the data input because of the output from the DA flip-flop, and the PARITY and FRAME ERR flip-flops are set or cleared depending on the signal (true or false) strobed in from the control logic.

An OVERRUN condition indicates that another data character is being sent to the UART before the previous character has been transferred to the DL11 receiver buffer register. If the DA flip-flop is set, indicating a character is stored in the holding register, and the UART control logic attempts to set the DA flip-flop again (indicating a new character has been shifted into the shift register), the DA signal from the control logic provides a clock input to the OVERRUN flip-flop. This flip-flop then sets because the data input is high (DA flip-flop was already set by the previous DA signal).

During normal operation (no OVERRUN condition), the character in the receiver data holding register is strobed onto the Unibus by an RBUF TO BUS H signal (Drawing DL-5) which produces SEL 2 L. This signal is applied to the UART reset data available line (pin 18) to clear the flip-flop.

Whenever the serial input line goes from a mark (high) to a space (low) and remains at the low level, the receiver shifts in one character, which is all spaces, then sets the FR ERR indicator and waits until the input line goes high (marking) before shifting in another character.

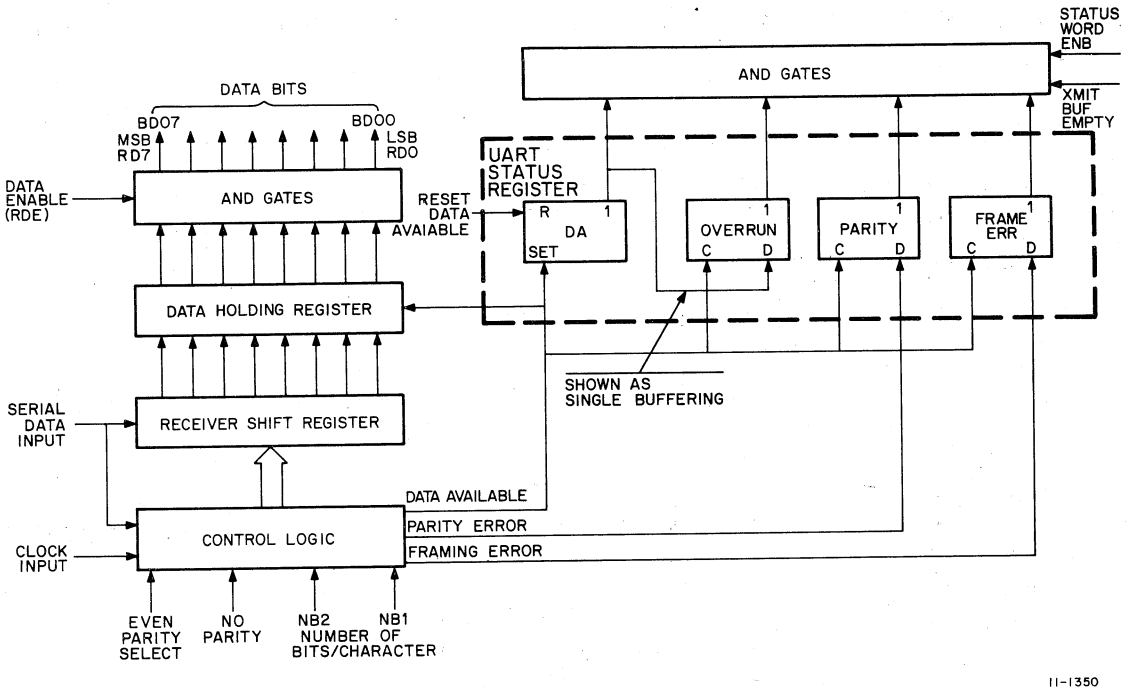

Figure 5-5 UART Receiver – Block Diagram

5.7.2 Transmitter Operation

A block diagram of the UART transmitter is shown in Figure 5-6. When the UART transmitter is in the idle state, the serial output line (pin 25) is a mark (high). When it is desired to transmit data, a parallel character is placed on bus data lines BUS D00 through D07 and strobed into the UART transmitter data buffer (lines connected to pins 26 – 33) by means of the data strobe signal (pin 23). The time between the low-to-high transition of data strobe and the corresponding mark-to-space transition of the serial output line is within one clock cycle (1/16 of a bit time) if the transmitter has been idle. The data strobe signal is a derivative of BUS TO XBUF (Drawing DL-5) which is used to load a character from the Unibus into the transmitter buffer register (XBUF).

When the data has been loaded into the UART data buffer, it is next transferred to the transmitter shift register under control of signals from an encoder which selects the format determined by the control logic. This permits selection of parity or no parity (pin 35), the type of parity (pin 39), the number of STOP bits (pin 36), and the number of data bits per character (pins 37 and 38). Note, however, that not all of these functions are supported as options on all DL11 variations. The specific functions available for each option are covered in Chapter 2.

The transmitter logic converts the parallel character from the Unibus into a serial output that is in a format selected by the control logic.

The clock input to the timing generator (pin 40) is derived from the DL11 clock circuits (Paragraph 5.8). The other input to the timing generator is the end-of-character (pin 24) signal from the output logic. This line goes high each time a full character (including STOP bits) is transmitted. If this line goes low, it prevents the timing generator from loading another character into the shift register. The line is normally high when data is not being transmitted and goes low at the start of transmission of the next character.

Whenever the transmitter data buffer is loaded while the previous character is being shifted through to the output line, the START bit of the new character immediately follows the last STOP bit of the previous character.

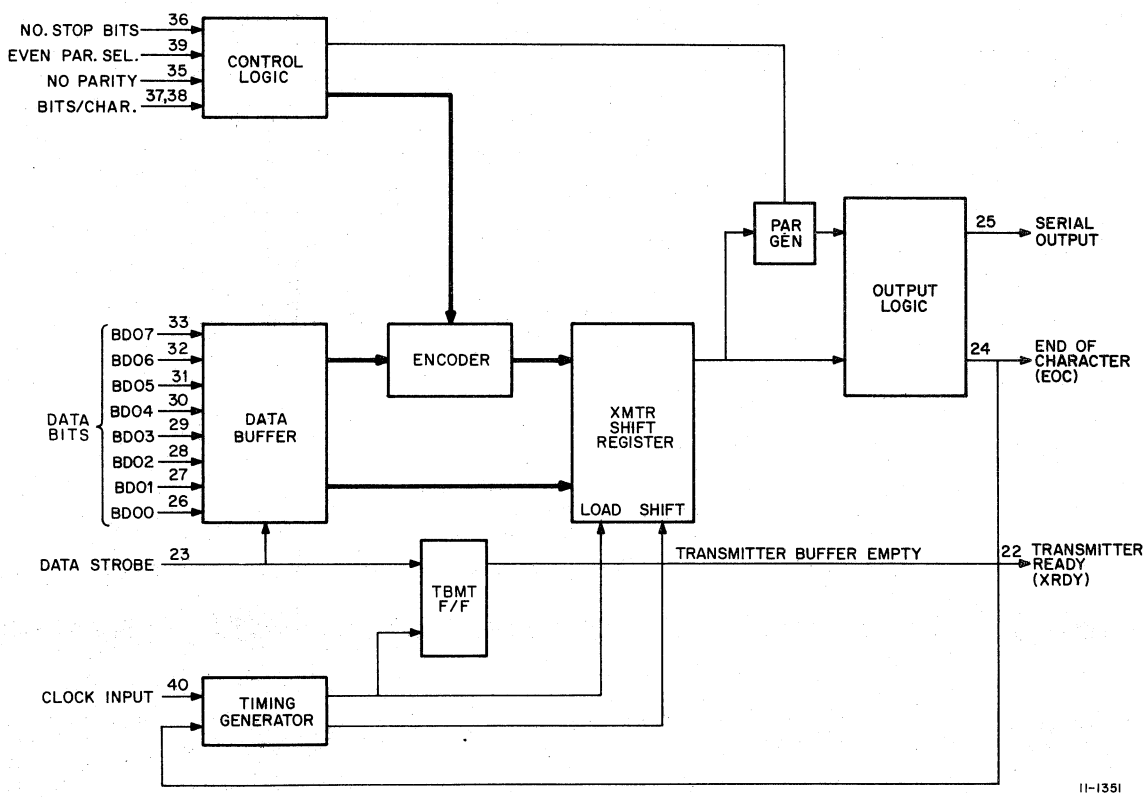

Figure 5-6 UART Transmitter – Block Diagram

The end-of-character signal is applied to a decade counter (Drawing DL-4) which the DL11 employs to generate the various STOP codes. This is necessary because the UART generates only 1 or 2 STOP bits but the DL11 generates 1, 1.5, or 2 STOP bits. Depending on the DL11 option used and the selection of jumpers J9, J10, and J11, the outputs of the decade counter and the XMIT CLK signal are combined to provide the appropriate input to the transmitter clock input at pin 40 of the UART. Note that the end-of-character signal cannot be read by the program.

When the data strobe (pin 23) signal loads the UART data buffer, the DL11 transmitter buffer (XBUF) is unloaded. Therefore, the data strobe signal sets the TBMT (transmitter buffer empty) flip-flop to provide a signal that becomes XRDY (transmitter ready). This XRDY signal can be read by the program and indicates that a new character can be loaded in the DL11 transmitter buffer.

5.8 CLOCK LOGIC

The DL11 clock logic (Drawing DL-3) provides the clock frequency and, therefore, the baud rates for both the receiver and transmitter sections of the DL11 interface. The basic frequencies are derived from a single crystal oscillator. Although only one crystal is used, four different crystal types are available from DEC so that the basic frequency range can be selected by simply plugging the appropriate crystal into the M7800 module.

The output of the crystal (Y1) is applied to four frequency divider circuits. A rotary switch taps off various divider outputs to provide selection of one of eight derived frequencies. Two additional switch positions permit application of external clock pulses. There are two rotary switches on the module: one for the receiver, one for the transmitter. Therefore, the receiver can operate at a different baud rate than the transmitter but both must be within the operating range of the selected crystal.

The specific frequencies selected by the four crystals, the frequencies that can be used with various DL11 options, and the location of the crystal and rotary switches on the module are covered in Chapter 2. The following paragraphs describe the clock logic. Clock circuits used during the maintenance mode are described in Paragraph 5.9.

The output frequency of crystal Y1 (Drawing DL-3) is applied to four IC chips that function as frequency dividers to provide the eight different frequencies fed to the rotary switches.

Figure 5-7 is a simplified diagram of the frequency divider circuits. The divisor of the circuit is dependent on which IC output line is tapped. For example, four output lines from the 7493 IC provide divide-by-2, divide-by-4, divide-by-8, and divide-by-16 functions. The diagram shows the various divisors, the output frequency, the rotary switch pin to which each frequency is tied, and the baud rate. Note that the clock frequency is 16 times the baud rate. In the example shown in the figure, a 1.152-MHz crystal is used. Any of the other crystals, such as the 4.608-MHz crystal, can also be used. If a different crystal is employed, the resultant output frequencies (and baud rates) are different, but the divider circuits function in an identical manner.

Note that switch positions 9 and 10 (or 0) are not shown on the figure. Position 9 is used to select an external clock pulse from the Berg connector. In this case, the external clock is applied to pin CC of the Berg connector and serves as a common clock pulse for both the receiver and transmitter.

Switch position 10 is also used for an external clock. However, in this case, the clock pulse is brought in on the back panel wiring and a different pulse can be used for the receiver and for the transmitter. The external transmitter clock is applied to pin DR1; the external receiver clock is applied to pin DS1.

The frequency selected by the transmitter switch is the XMIT CLK H signal which is used for generation of the transmitter clock input (pin 40) of the UART (Drawing DL-4).

The frequency selected by the receiver switch is the RCVR CLK H pulse which is applied to the MAINT multiplexer (Drawing DL-3). The output of this RCLK H is applied directly to the receiver clock input (pin 17) of the UART. Operation of the UART receiver is described in Paragraph 5.7.1.

On DL11-A and DL11-C options, the RCVR CLK H (RCLK H) also sets a divide-by-2 flip-flop which provides the clock input for the START bit detector (8271 chip) that produces RESET RDR ENB L. This circuit is described in Paragraph 5.4.1.9.

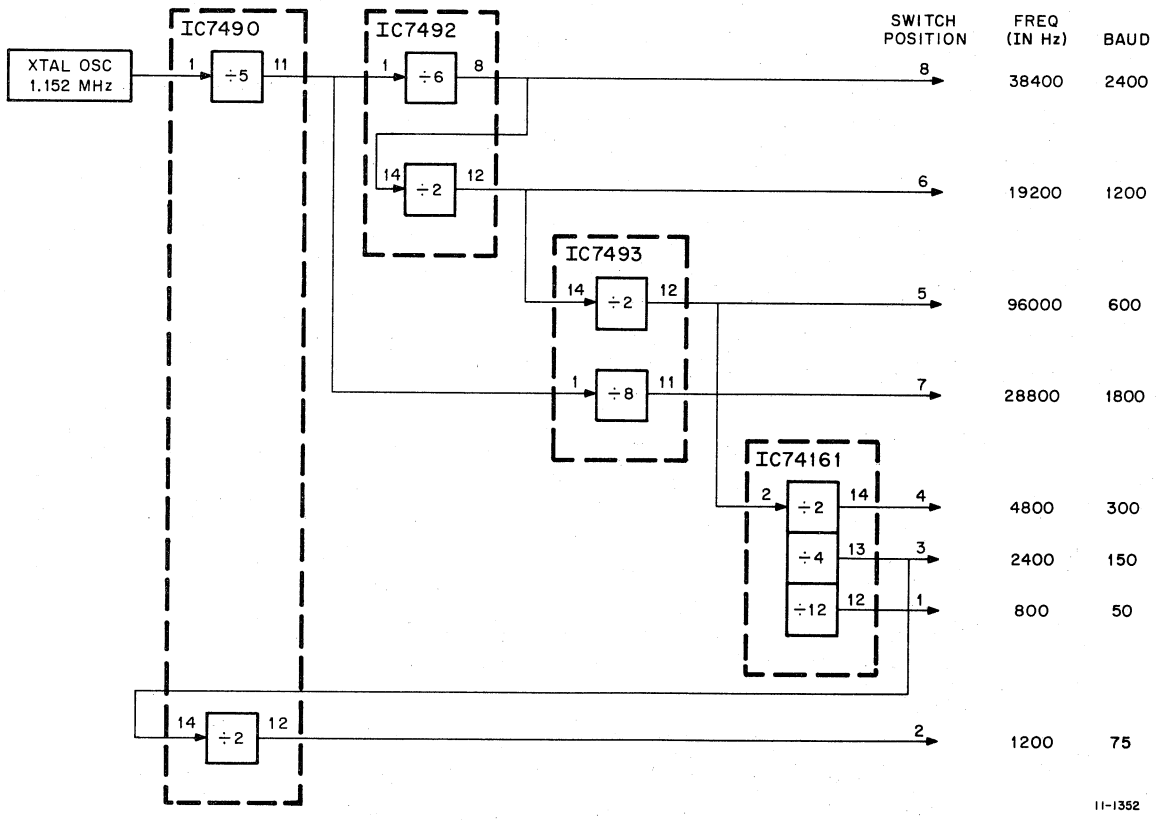

Figure 5-7 Frequency Divider Logic – Simplified Diagram

5.9 MAINTENANCE MODE LOGIC

The maintenance mode is used to check operation of the DL11 control logic and is available on all DL11 options. Figure 5-8 is a simplified diagram of both the normal and maintenance modes. During normal operation, data from the bus is converted by the transmitter and sent to the external device, or data from the external device is converted by the receiver and sent to the bus.

During the maintenance mode, a character is loaded into the transmitter buffer (XBUF) from the Unibus. This parallel character is then converted to a serial output by the UART transmitter section. However, in addition to entering the external device, the serial data is also fed back into the receiver, which converts it back to parallel data and places it on the bus. If the character received by the bus is identical to the character sent out on the bus, then both the transmitter and the receiver are functioning properly.

Before the maintenance loop can be used, the transmitter must be selected for use and the transmitter buffer (XBUF) loaded with a character. The program selects the maintenance mode by setting bit 02 (MAINT bit) in the transmitter status register (XCSR). This sets the MAINT flip-flop in the transmitter logic (Drawing DL-4).

The MAINT (1) H output of the flip-flop is used as an enabling level for a 4-line to 1-line multiplexer (IC 74153 on Drawing DL-3). A simplified version of this multiplexer is shown in Figure 5-9. Normally, the gates shown enabled by the MAINT (1) H signal in the figure are inhibited and the serial output from the transmitter, as well as the clock signals, are fed to the logic used during the normal operating mode. However, when MAINT (1) H is present, the gates are qualified and perform two basic functions.

The first function is to gate the serial output of the transmitter (SERIAL OUT H) to the serial input line (SI H) of the receiver. The second function is to force the RCVR CLK pulse to be the same as the XMIT CLK, regardless of the switch position of the RCVR CLK. When MAINT (1) H is present, the gate receiving RCVR CLK H is inhibited and the XMIT CLK H pulse is gated through to the RCLK H line of the receiver. Although not shown in the figure, the XMIT CLK H is also applied to the clock line of the transmitter.

Because the receiver logic is activated by a START bit (regardless of where the START bit comes from), the receiver is activated as soon as it receives the first input from the transmitter. After the receiver assembles the data, the program can compare the received character with the transmitted character to determine if the DL11 interface is functioning properly.

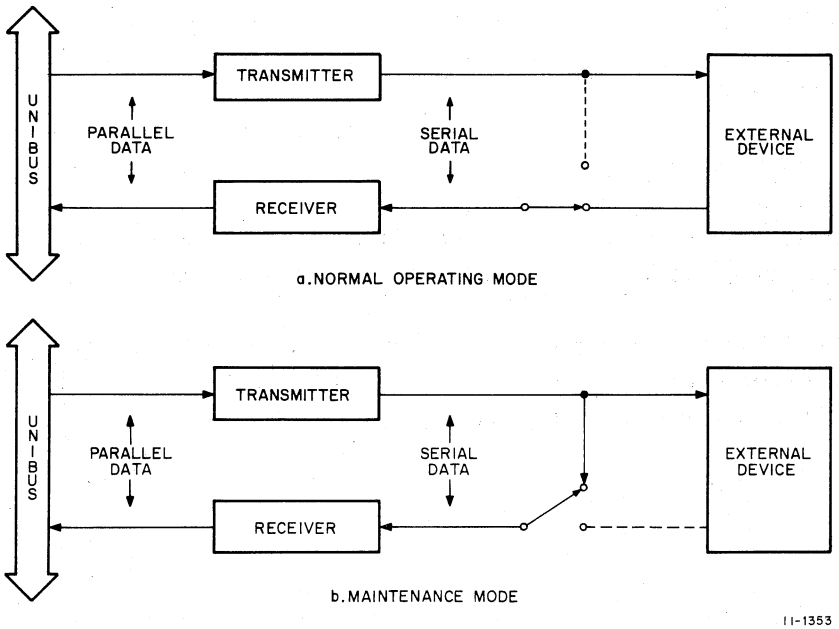

Figure 5-8 Operating Modes

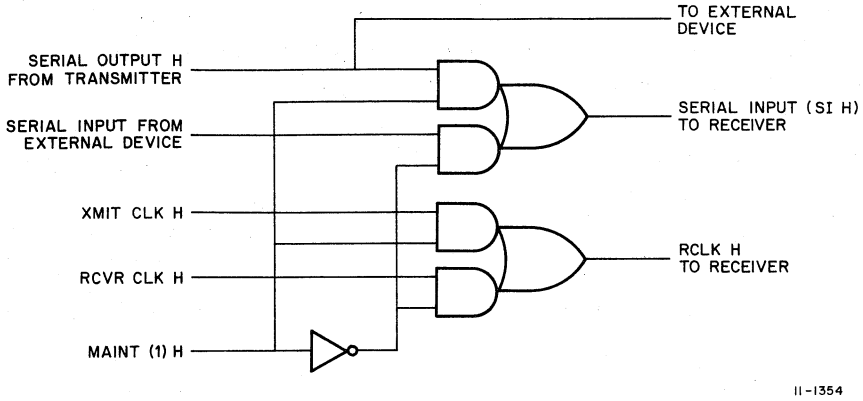

Figure 5-9 Maintenance Logic – Simplified Diagram

5.10 BREAK GENERATION LOGIC

The break generation logic permits the DL11 interface to transmit a continuous space to the external device. This capability is only available on the DL11-C, D, and E options.

When it is desired to transmit a break, the BREAK bit (bit 00) in the transmitter status register (XCSR) must be set. This is accomplished by using the BUS TO XCSR H signal as a load pulse to load a 1 (BD00 H) into the BREAK flip-flop (Drawing DL-4). Note that this flip-flop is shown on the drawing as part of a 74175 IC chip. This chip is basically four D-type flip-flops with common clock and clear inputs. A schematic of this IC is shown in Appendix A.

The BREAK (0) H output of the flip-flop, which is low when the flip-flop is set, is applied to the direct clear input of the SERIAL OUT flip-flop. Because this output is a level, it holds the SERIAL OUT flip-flop clear and prevents the UART transmitter output from being sent to the device. In effect, a continual low (space) level is presented on the SERIAL OUT line.

The duration of the break can be timed by the program because the transmitter and XMIT RDY flag continue to function normally; only the transmitter output line is inhibited. For example, the program can continue loading characters into the transmitter and counting the number of characters by monitoring the XMIT RDY flag. At a predetermined count, the program can clear the BREAK bit and resume normal operation.

Whenever the BREAK bit is used, a null character (all 0s) should be transmitted before the BREAK bit is set and immediately after it is cleared. This is necessary because the UART transmitter is double-buffered and it is important to ensure that the previous character has cleared the line.

APPENDIX A
IC SCHEMATICS

The DL11 Asynchronous Line Interface employs six types of integrated circuit (IC) chips in its design. A detailed schematic of each type, including a packaging diagram with pin number designations, and a truth table, is given in this appendix.

The following IC schematics are included in this Appendix:

7490	Frequency Divider
7492	Frequency Divider
7493	Frequency Divider
8271	4-bit Shift Register
74153	4-line to 1-line Multiplexer
74175	Quad D-Type Flip-Flop

7490 FREQUENCY DIVIDER

DUAL-IN-LINE PACKAGE (TOP VIEW)

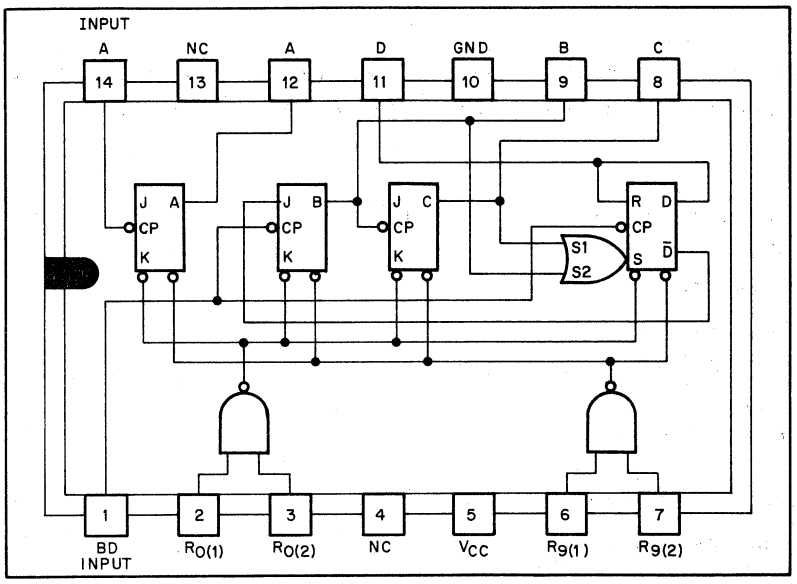

8E-0374

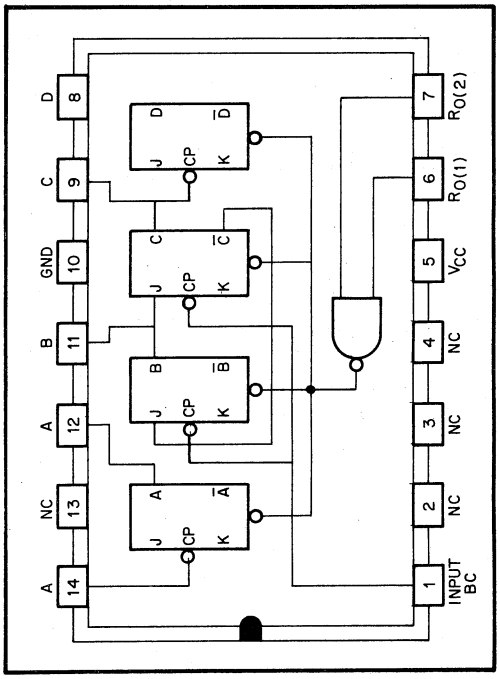

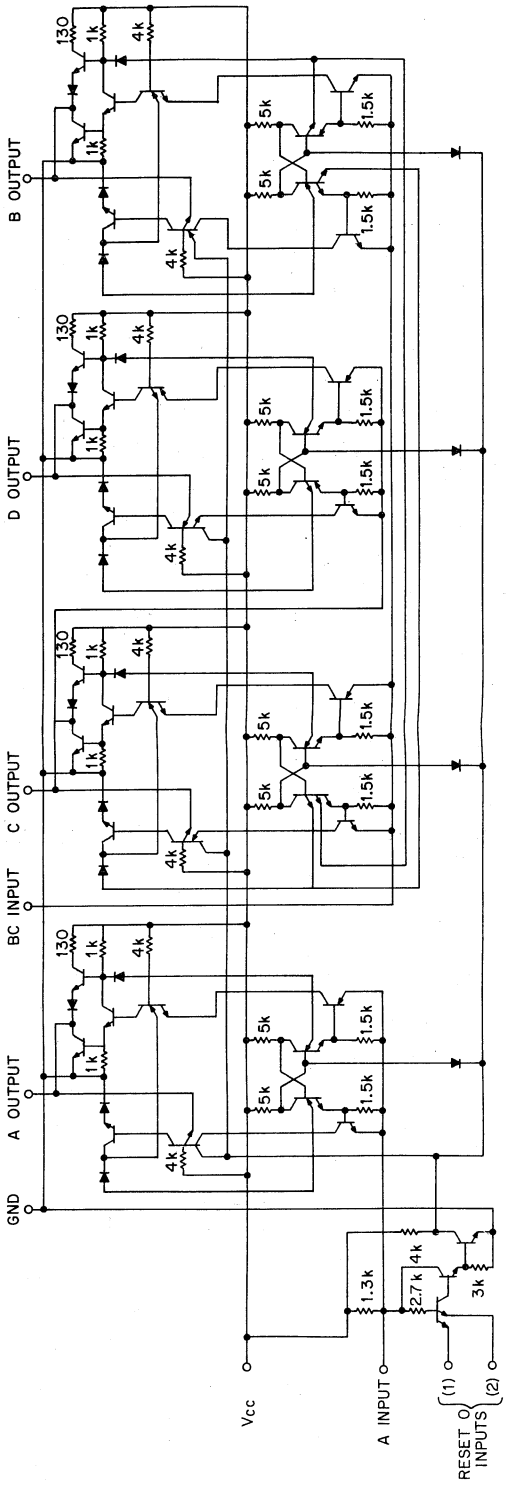

NOTES:
1. Component values shown are nominal.
2. Resistor values are in ohms.

11-1359

7493 FREQUENCY DIVIDER

TOGGLE INPUT PULSE	OUTPUT			
	Y1	Y2	Y3	Y4
0	0	0	0	0
1	1	0	0	0
2	0	1	0	0
3	1	1	0	0
4	0	0	1	0
5	1	0	1	0
6	0	1	1	0
7	1	1	1	0
8	0	0	0	1
9	1	0	0	1
10	0	1	0	1
11	1	1	0	1
12	0	0	1	1
13	1	0	1	1
14	0	1	1	1
15	1	1	1	1

*TRUTH TABLE

*Applies When 7493 Is Used As 4-Bit Ripple-Through Counter.

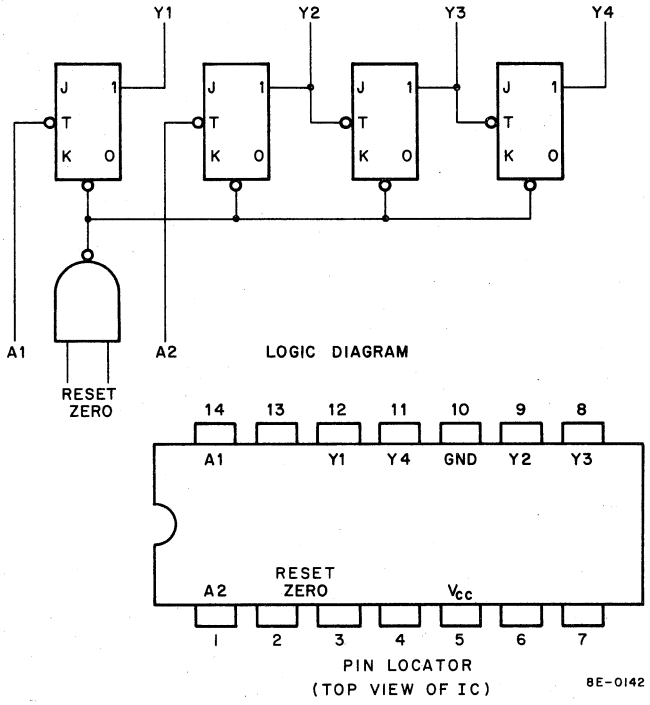

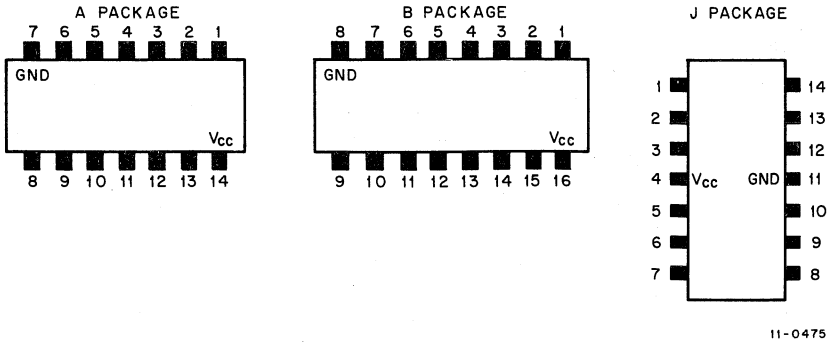
A PACKAGE
7 6 5 4 3 2 1
GND
Vcc
8 9 10 11 12 13 14
B PACKAGE
8 7 6 5 4 3 2 1
GND
Vcc
9 10 11 12 13 14 15 16
J PACKAGE
1 2 3 4 5 6 7
14 13 12 11 10 9 8
Vcc
GND
11-0475

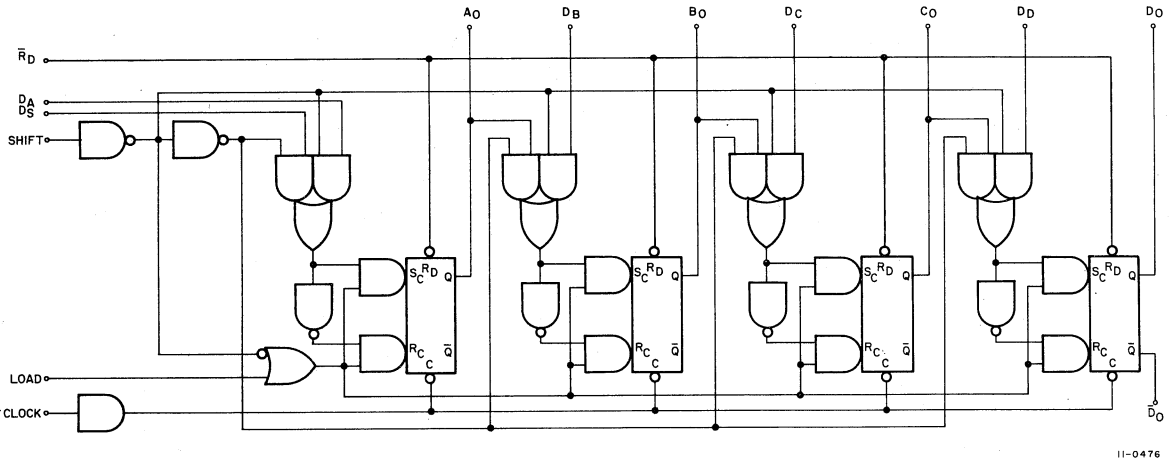
AO
DB
BO
DC
CO
DD
DO
RD
DA
DS
SHIFT
LOAD
CLOCK
SC RD Q
RC C Q̄
DO
11-0476

74153 4-LINE TO 1-LINE MULTIPLEXER

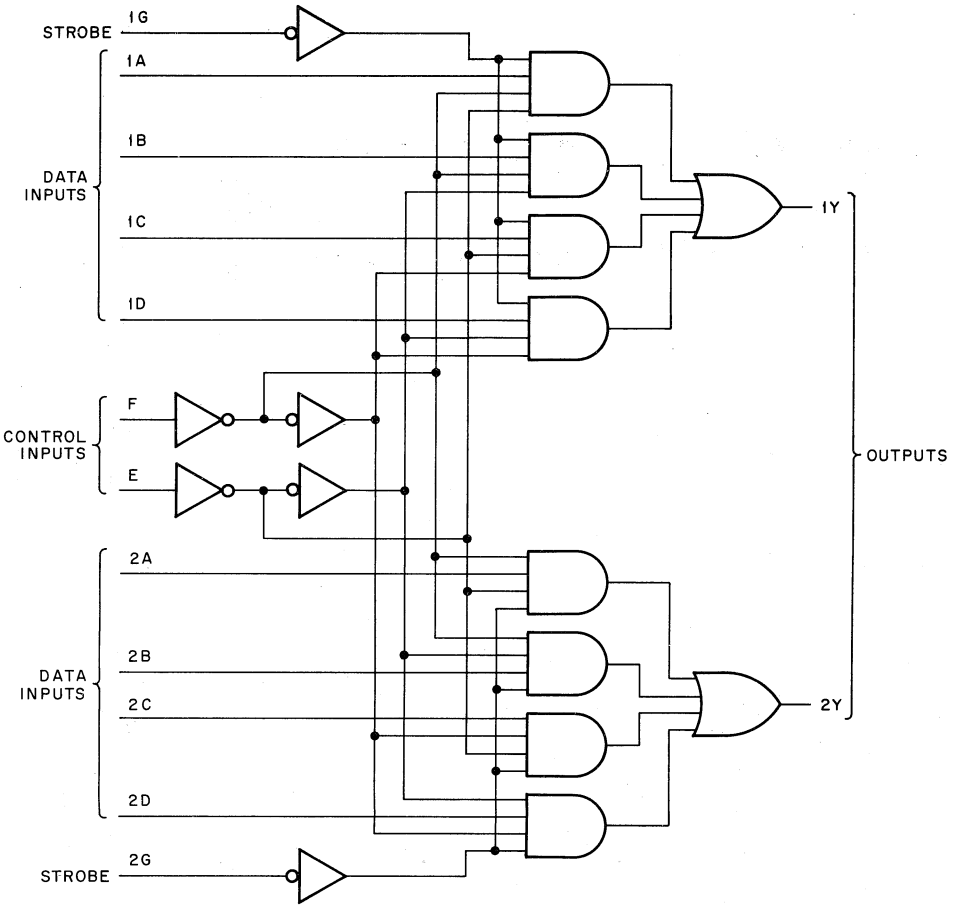

LOGIC DIAGRAM

CONTROL INPUT		STROBE	OUTPUT
E	F	G	Y
LOW	LOW	LOW	A
HIGH	LOW	LOW	B
LOW	HIGH	LOW	C
HIGH	HIGH	LOW	D
DON'T CARE		HIGH	LOW

TRUTH TABLE (EACH HALF)

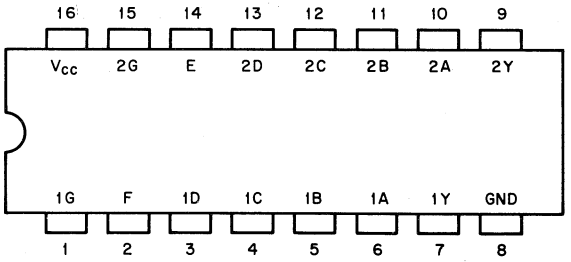

PIN LOCATOR
(TOP VIEW OF IC)

8E-0138

TRUTH TABLE

INPUT t_n	OUTPUTS t_{n+1}	
D	Q	$\bar{Q}$
H	H	L
L	L	H

t_n = Bit time before clock pulse.
t_{n+1} = Bit time after clock pulse.

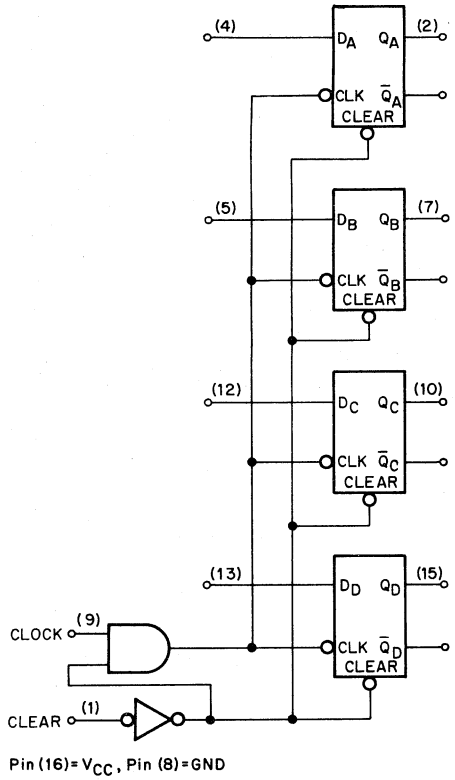

Pin (16) = V_{CC}, Pin (8) = GND

11-1113

APPENDIX B
VECTOR ADDRESSING

B.1 INTRODUCTION

Because the DL11 Asynchronous Line Interface is basically a communications device, interrupt vectors must be assigned according to the floating vector convention used for all communications devices. These vector addresses are assigned in order from 300 to 777 according to a specific method that ranks the type of devices in a particular PDP-11 System.

The first vector address (300) is assigned to the first DC11 Serial Asynchronous Line Interface in the system, the next DC11 (if used) is then assigned vector address 310, etc. The vector addresses are assigned consecutively to each unit of the second ranked device type (KL11 or DL11-A or DL11-B), then to the third ranked device (DP11), and so on in accordance with the following list:

1. DC11 Asynchronous Line Interface
2. KL11 Teletype Control (or DL11-A or DL11-B)
3. DP11 Synchronous Serial Modem Interface
4. DM11 Asynchronous Serial Line Multiplexer
5. DN11 Automatic Calling Unit
6. DM11-BB Modem Control
7. DR11-A Device Registers
8. DR11-C General Device Interface
9. DT11 Bus Switch
10. DL11-C Asynchronous Line Interface
11. DL11-D Asynchronous Line Interface
12. DL11-E Asynchronous Line Interface

If any of these devices are not included in a system, the vector address assignments move up to fill the vacancies. If a device is added to an existing system, its vector address must be inserted in the normal position and all other addresses must be moved accordingly. If this procedure is not followed, DEC software cannot test the system.

Note that the floating vectors range from addresses 300 to 777 but addresses 500 through 534 are reserved for special bus testers. In addition, address 1000 is used for the DS11 Synchronous Serial Line Multiplexer.

An address map is shown in Figure B-1 and a list of the vector addresses is given in Paragraph B.2. It should be noted that the system Teletype (KL11) is not part of the floating vector scheme and is assigned vector addresses 060 and 064. Therefore, if a DL11 is used as a control for the system Teletype console, it should be assigned addresses 060 and 064. All other DL11s would follow the floating vector conventions.

B.2 INTERRUPT VECTORS

000	RESERVED	
004	ERROR TRAP	
010	RESERVED INSTRUCTION TRAP	
014	DEBUGGING TRAP	
020	IOT TRAP	
024	POWER FAIL TRAP	
030	EMT TRAP	
034	"TRAP" TRAP	
040	SYSTEM SOFTWARE	COMMUNICATION WORDS
044	SYSTEM SOFTWARE	COMMUNICATION WORDS
050	SYSTEM SOFTWARE	COMMUNICATION WORDS
054	SYSTEM SOFTWARE	COMMUNICATION WORDS
060	TELETYPE IN	
064	TELETYPE OUT	
070	PC11 HIGH-SPEED READER	
074	PC11 HIGH-SPEED PUNCH	
100	KW11-L LINE CLOCK	
104	KW11-P PROGRAMMABLE CLOCK	
110	DR11-A (Request A)	
114	DR11-A (Request B)	
120	XY11 XY PLOTTER	
124	DR11-B	
130	AD01	
134	AFC11	
140	AA11-A,B,C,E SCOPE	
144	AA11 LIGHT PEN	
150		
154		
160		
164		
170	USER RESERVED	
174	USER RESERVED	
200	LP11 LINE PRINTER CONTROL	
204	RF11 DISK CONTROL	
210	RC11 DISK CONTROL	
214	TC11 DECTAPE CONTROL	
220	RK11 DISK CONTROL	
224	TM11 MAGTAPE CONTROL	
230	CR11 CARD READER CONTROL	
234	UDC11	
240	11/45 PIRQ	
244	FPU ERROR	
250		

(continued on next page)

254 RP11 DISK PACK CONTROL
260
264
270 USER RESERVED
274 USER RESERVED
300 ← FLOATING VECTORS START AT THIS ADDRESS
304
310
314 **NOTE**
320
324 **Floating vectors start at address 300 and are assigned**
330 **in the following order:**
334
340
344 **all DC11s, then**
350 **all KL11s,* then**
354 **all DP11s, then**
360 **all DM11s, then**
364 **all DN11s, then**
370 **all DM11-BBs, then**
374 **all DR11s, then**
400 **all DT11s, then**
404 **all DL11-Cs, then**
410 **all DL11-Ds, then**
414 **all DL11-Es**
420
424
430 ***or DL11-As or DL11-Bs**
434
440
444
450
454
460
464
470
474
500
504
510
514
520 SPECIAL BUS TESTERS
524
530
534
540
544
550
554
560
564
570
574
600 through 774 ← FLOATING VECTORS END HERE
1000 ← DS11

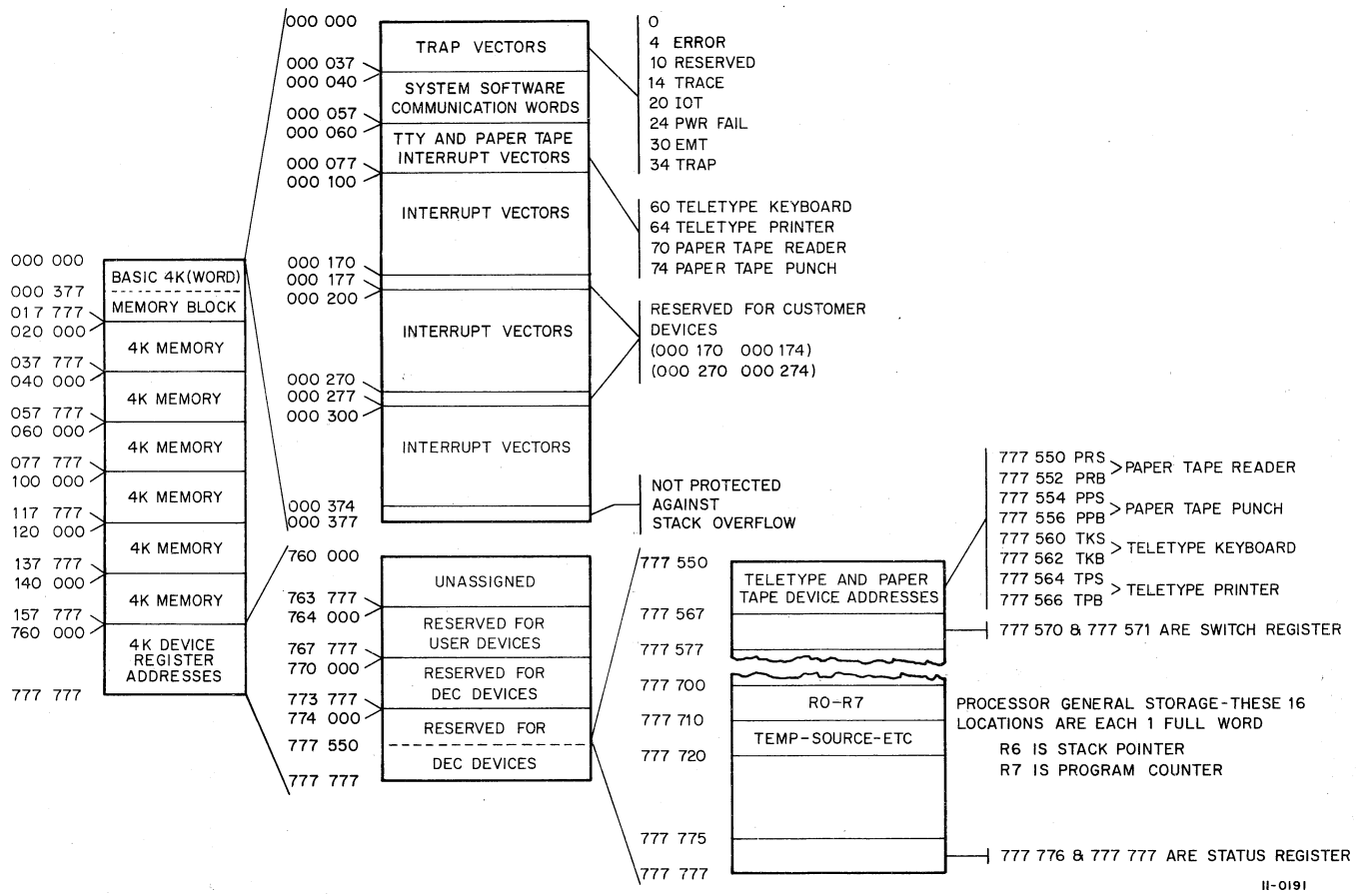

Figure B-1 Address Map

DL11 ASYNCHRONOUS LINE INTERFACE
EK-DL11-TM-003

Reader's Comments

Your comments and suggestions will help us in our continuous effort to improve the quality and usefulness of our publications.

What is your general reaction to this manual? In your judgment is it complete, accurate, well organized, well written, etc.? Is it easy to use? _____

What features are most useful? _____

What faults do you find with the manual? _____

Does this manual satisfy the need you think it was intended to satisfy? _____

Does it satisfy *your* needs? _____ Why? _____

Would you please indicate any factual errors you have found. _____

Please describe your position. _____

Name _____ Organization _____

Street _____ Department _____

City _____ State _____ Zip or Country _____

CUT OUT ON DOTTED LINE

Fold Here

Do Not Tear - Fold Here and Staple

FIRST CLASS
PERMIT NO. 33
MAYNARD, MASS.

BUSINESS REPLY MAIL
NO POSTAGE STAMP NECESSARY IF MAILED IN THE UNITED STATES

Postage will be paid by:

Digital Equipment Corporation
Technical Documentation Department
146 Main Street
Maynard, Massachusetts 01754

digital

DIGITAL EQUIPMENT CORPORATION
MAYNARD, MASSACHUSETTS 01754